ULTRAFLEX 15

A LEADER IN MARINE PRODUCT INNOVATION SINCE 1935

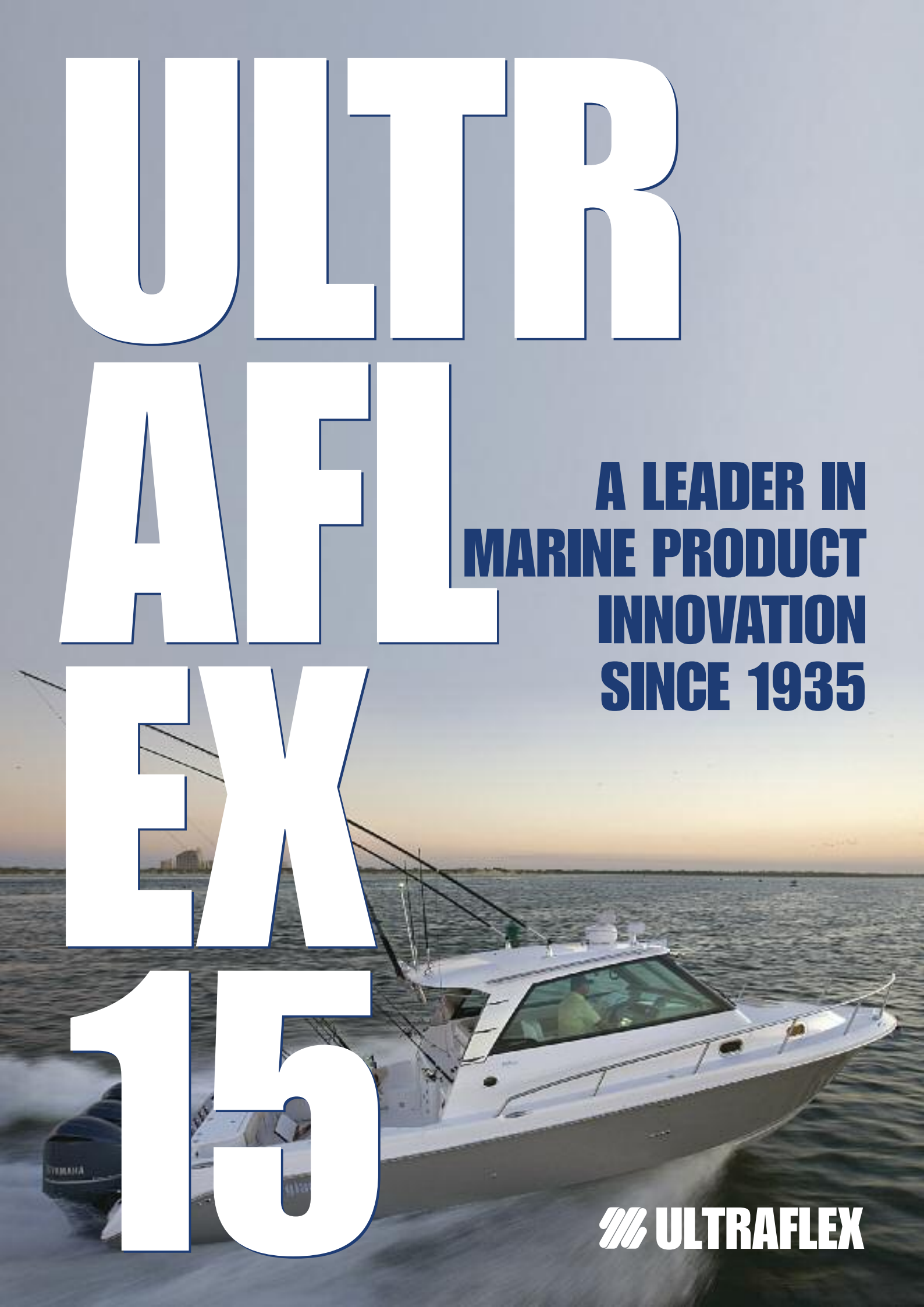

ULTRAFLEX

NEW15

T91, T93ZT, T101, T103ZT steering helms page 27-28

X90 – Steering lock device page 27

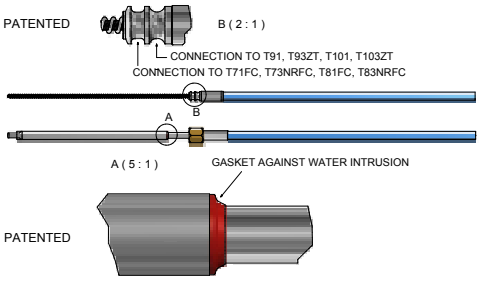

M90 Mach
Steering cable (patented) page 27-28

New mechanical steering
kit packaging page 34

New hydraulic steering
kit packaging page 37

Gotech-OBS page 36-37

GOTECH-I page 96

K18 – Kit for autopilot applications with Gotech™ page 44

NEW15

MASTERDRIVE
Power assisted inboard steering system page 94-95

PADDLE TRIM page 133-134

Adorno B/BCH and B/BB page 126

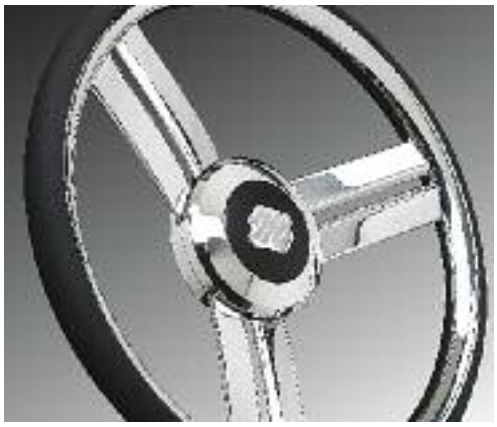

CONTARINI page 127

VENIER page 129

GRIMANI page 131

V20 page 107

V29 page 111

ULTRAFLEX GROUP

80 years 1935-2015

1935 - 2015

Ultraflex Group has 80 years of experience in manufacturing and distributing the highest quality and most innovative products. The Ultraflex Group affiliate Companies that design and produce widely known equipments in the marine, industrial, architectural, Led technology and alternative energy fields.

ULTRAFLEX

Steering and control systems for pleasure boats

UFLEX

Worldwide distribution of marine accessories

UFLEX - Renewable Energy

Systems and accessories for alternative energy applications

ULTRAFLEX CONTROL SYSTEMS

Window and skylight remote controls. Innovative LED road signs

INDUSTRIA di LEIVI

Mechanical remote controls in the industrial field

UFLEX USA

Manufacturing the world's finest marine products

ULTRAFLEX - Factory in Casella

UCS - Factory in Borgo Fornari

IL - Factory in Leivi

UFLEX USA - Factory in Sarasota

Quality and enviromental Management System

The Ultraflex Quality Management Systems is certified CISQ-IQNet by the Italian Shipping Registry (RINA), in conformity with the UNI EN ISO 9001:2000 rule. Ultraflex certification n° 6669/02/S (former 420/96). The quality management system involves all the company resources and processes starting from the design, in order to:

- Assure product quality to the customer
- Set up the actions to maintain and improve the quality standards constantly
- Pursue a continuous process improvement to meet the market needs

The Ultraflex Environmental Management System is certified CISQ-IQNet by the Italian Shipping Registry (RINA), in conformity with the UNI EN ISO 14001. Ultraflex certification n° EMS-1282/S.

Constantly test the products to verify their conformity with the EEC 94/25 and ABYC (American Boat and Yacht Council) requirements.

RINA

RINA

SOCIO UCINA

MEMBER OF NMMA National Marine Manufacturers Association

GUARANTEE CONDITIONS

page 6

Power A Mark II™

ELECTRONIC CONTROL SYSTEM

page 7 - 16

MECHANICAL STEERING SYSTEMS AND ACCESSORIES

page 17 - 33

PACKAGED MECHANICAL STEERING SYSTEMS

page 34

PACKAGED HYDRAULIC STEERING SYSTEMS CROSS REFERENCE

page 35 - 39

OUTBOARD STEERING SYSTEMS

page 40 - 57

SilverSteer™

HIGH PERFORMANCE OUTBOARD STEERING SYSTEMS

page 58 - 63

MasterDrive™

POWER ASSISTED OUTBOARD STEERING SYSTEM

page 64 - 73

TIE BARS FOR OUTBOARD TWIN ENGINES

page 74 - 76

STERNDRIVE STEERING SYSTEMS

page 77 - 78

ACCESSORIES AND FITTINGS FOR OUTBOARD HYDRAULIC STEERING SYSTEMS

page 79 - 81

Ultraflex S.p.A. declines any liability for possible mistakes in this catalogue due to printing errors. Ultraflex S.p.A. reserves the right to make those modifications that are considered to be suitable for its products.
Publishing rights, trade marks, part numbers and photographs of the Ultraflex products present on this catalogue are Ultraflex property and all rights are reserved.

CE

BUREAU VERITAS 7828

BubbleBuster™ AUTOMATIC FILLING AND PURGING SYSTEM
page 82

INBOARD HYDRAULIC STEERING SYSTEMS - APPLICATION GUIDE
page 83 - 85

INBOARD HYDRAULIC STEERING SYSTEMS
page 86 - 96

MASTERDRIVE™ POWER ASSISTED INBOARD STEERING SYSTEM
page 94 - 95

STEERING WHEELS
page 97 - 132

PADDLE TRIM
page 133 - 134

SINGLE AND TWO LEVER ENGINE CONTROLS AND ACCESSORIES
page 135 - 151

ENGINE CONTROL CABLES AND ACCESSORIES
page 152 - 156

SPARE PARTS
page 157 - 159

MARKETING ITEMS
page 160 - 161

The descriptions and guidelines shown in this catalogue should be used as general reference only. For any further information please contact our Technical Service.

ULTRAFLEX - GUARANTEE CONDITIONS AND EXCLUSIONS

Ultraflex products are guaranteed against defects in material or workmanship for a period of two years following the date of manufacture. If the Ultraflex products are installed and used on commercial boats the guarantee is limited to one year following the date of manufacture.

Defective products should be returned freight prepaid to the Ultraflex facility and must be accompanied by an Ultraflex issued Return Goods Authorization number.
Upon receipt, the product will be examined to determine the cause of defect. If the product is determined to have a defect in workmanship or material, it will be repaired or replaced at the Ultraflex discretion.
This guarantee does not cover labor.
This guarantee does not cover products that have been misinstalled or misapplied. Furthermore, it does not cover claims for direct or indirect damage.
We decline liability and exclude guarantee if products are improperly installed, misapplied, or misused.

Our products are not intended to be used in racing applications, therefore this guarantee does not cover our products if they are used for racing purposes.

Power A Mark II™. The "Power A Mark II™ - User and Installation Manual" describes activities, operations, technical specifications which must be followed during the installation and/or usage of the product, in order to keep a valid warranty. Descriptions and drawings in that manual are suitable to allow installation and use of the product to skilled persons. In case of doubt and/or for any information, please contact our Technical Service.

ULTRAFLEX mechanical steering systems components as steering helms, steering cables and steering wheels are all marked CE in compliance with the EEC Directive 94/25 and the rules EN29775 - EN28848. Ultraflex hydraulic steering system components are all marked CE in compliance with the EEC Directive 94/25 and the rule ISO 10592. The CE Examination on the ULTRAFLEX steering systems has been carried out by an Institute certified by the European Commission.

Ultraflex electronic control components are EMC certificated and CE marked in conformity with CEI EN60945 and UNI-EN ISO 11547 standards.

We kindly remind you that on the boats marked CE it is compulsory to install steering systems with components marked CE (see art. 4 and 5 of Directive 94/25/CE).

We inform you the ULTRAFLEX guarantee is null and void if some ULTRAFLEX components are installed on a steering system together with products of other brands, with the exception of those brands clearly specified in our catalogue on page 21.

The descriptions and guidelines shown in this catalogue should be used as general reference only. For any further information please contact our Technical Service.

7

ELECTRONIC CONTROL SYSTEM

Power & Control

Power A Mark II™

ELECTRONIC CONTROL SYSTEM

The easy to install PowerA Mark II™ control system provides fingertip operation of throttle and shift levers.
Using reliable and precise digital data transmission, this single or dual function control system is specifically designed to work on mechanically controlled as well as electronic and electro-hydraulic gas and diesel inboards, sterndrives and outboards.
The PowerA Mark II™ comes with many features including Dock Assist, which offers the operator the opportunity to reduce the sensitivity of the throttle function for easier dockside handling.
Other standard features include RPM Synchronization, which reduces engine vibration and improves fuel economy, a High Idle feature to increase RPM where higher idle is necessary for cold engine operations, a programmable Trolling Valve Control and neutral Warm Up.
The stylish and ergonmically designed control makes the PowerA Mark II™ suitable for many types of applications ranging from sport boats, yachts and commercial applications.
Available with and without trim, the control has audible and visual interfaces which alert the operator to the current status of the control system.
With the ability to control up to 2 engines from up to 4 different stations, the PowerA Mark II™ is a modular and flexible system with simple to install components.
The unique Control Unit Display of the PowerA Mark II™ provides simple touch pad programming with descriptive information regarding the set up, tuning and diagnostics of the system.
The Power A Mark II is a system that can replace mechanical controls either on fully mechanical engines, or on fully electronical engins, or on engines with the combination of both characteristics.

PRIVATE PROTOCOL CAN BUS FOR DATA TRANSMISSION

SUITABLE FOR MECHANICAL SHIFT AND THROTTLE AS WELL AS ELECTRONIC THROTTLE AND SHIFT

CONNECTION OF MULTIPLE STATIONS UP TO 4 CONTROLS

MODULAR SYSTEM

DIRECT COMMUNICATION WITH ELECTRONIC ENGINES (SAE J 1939 or NMEA 2000)

PLUG'N PLAY CONNECTIVITY

AUTOMATIC ENGINES SYNCHRONIZATION

DOCK ASSIST

FULLY PROGRAMMABLE SHIFT DELAYS

PERSONALIZED LABEL UPON REQUEST

CE

CHROME FINISH CONTROL STATIONS:

Control without trim:	
Single engine	- 42009 G
Twin engines	- 42011 T
Control with trim:	
Single engine	- 42010 R
Twin engines	- 42012 V

IP protection: IP66

BLACK FINISH CONTROL STATIONS:

Control without trim:	
Single engine	- 42426 Z
Twin engines	- 42425 X
Control with trim:	
Single engine	- 42427 B
Twin engines	- 42428 D

IP protection: IP66

Power A Mark II™

TECHNICAL FEATURES:

- Single Lever/Dual Function and Dual Lever/Dual Function for shift, throttle and trolling
- Up to 4 control stations
- Control boxes IP Protection: IP66
- Power supply: min 9 max 32V
- Working temperature: -25°C to +75°C
- Control station functions:
  - Station Select
  - Engines Warm up
  - High idle
  - Docking
  - Engine synchronization
  - Trolling valve, on request, according to customer's specifications
- Electronic throttle outputs:
  - Voltage (double output 0 - 5V and 0 - 2,5V)
  - PWM (0-100%, frequency from 200Hz to 1kHz)
  - Current (4 - 10mA)
- Digital Throttle Output:
  - SAE J 1939
  - NMEA 2000
- Trolling valve output
  - Voltage (0 - 5V)
  - PWM (0-100%, frequency from 100Hz to 1 kHz)
  - Current (4 - 20mA)
- Electric shift control:
  - 2 or 3 ON/OFF or proportional solenoids
  - Shift delays fully settable

SAFETY DEVICES:

- Start in-gear PROTECTION(start inhibition with shifted gear)
- Audible and visual diagnostic failure alarm (READABLE MESSAGES ON THE CONTROL UNIT DISPLAY)
- Proportional shift delays
- Programmable working parameters
- Meets CEI EN 60945 standards

EMC CERTIFICATION AND CE MARK

Conforms with:

- CEI EN60945
- UNI-EN ISO 11547

COMPATIBILITY WITH ALL MECHANICAL THROTTLE ENGINES

COMPATIBILITY WITH ALL ELECTRONIC THROTTLE ENGINES

- Cummins, Detroit Diesel, Scania, Iveco, FPT, Lombardini, VM Motori, FNM, Yanmar, CMD-Volkswagen, Hyundai ecc.

The Power A Mark II™ electronic system actuators cannot be installed in those rooms where ignition-proof devices are required.

The "**Power A Mark II™ - Installation and User Manual**" describes activities, operations, technical specifications which must be followed during the installation and/or usage of the product, in order to keep a valid warranty and obtain the better performance. Description and drawings in that manual are suitable to allow an easy installation and safe use of the product by skilled personnel. In case of doubt and/or for any information, please contact our Technical Service.

PLEASE REFER TO LIMITED WARRANTY CONDITIONS REPORTED IN THIS CATALOGUE.

SYSTEM CONTROL UNITS

Control Unit

PA2-CU - 42017 F
Control Unit: user interface for the configuration, settings and diagnostic of all the modules in a system.
IP protection: IP65
Dim.: 215 x 120 mm (8.5" x 4.7")

V-Throttle
I-Throttle

PA2-VT - 42018 H - for 0-5V interfaces (voltage)
PA2-IT - 42019 K - for 4-20 mA interfaces (current)
They supply the throttle electronic signal. Required for use with direct connection to electronic throttle on the engine.
IP protection: IP65
Dim.: 205 x 110 mm (8" x 4.3")

SAEJ-Throttle

PA2-SAEJT - Customized
It supplies the digital signals to CAN SAEJ 1939 or NMEA 2000 interfaces
IP protection: IP65
Dim.: 205 x 110 mm (8" x 4.7")

PWM-Throttle

PA2-PWMT - 42020 U
It supplies the electrical signals to PWM interfaces
IP protection: IP65
Dim.: 205 x 110 mm (8" x 4.3")

Shift Unit

PA2-SU - 42023 A
It controls up to 2 shifts with solenoids. Required for use with direct connection to the electrical shift unit on the transmission.
IP protection: IP65
Dim.: 210 x 120 mm (8.3" x 4.7")

E-Troll
Elettronica o elettrica

Control Unit for Trolling Valve both electronic (0-5V; 4-20mA) and electric (PWM) interface, designed according to customer's specifications. For controls with Trolling Valve please contact our Technical Service for custom configuration.

Power Unit

PA2-PU - 42026 G
Grants the power supply up to 4 modules with the input combination of up to 2 batteries, 12 and 24V. Required for all PowerA Mark II installations.
IP protection: IP65
Dim.: 205 x 110 mm (8" x 4.3")

M-Actuator

PA2-MA - 42027 J
The electromechanical actuators can control any mechanical interface (throttle shift or custom made trolling valve) through MACHZero and C8 mechanical cables.
IP protection: IP66
Length: 320 mm (12.6")

CHART A - E-Throttle Unit

MODEL	P. No.	DESCRIPTION	FEATURES	No. OF ENGINES	ENGINE TYPE
V-Throttle	42018H	Throttle with analog voltage interface	Redundant voltage input, IVS.	1 - 2	FPT, VolksWagen, Yanmar, Mercruiser, Lombardini.
I-Throttle	42019K	Throttle with current analog interface	Current outoputs.	1 - 2	4 - 20 mA throttle engines
PWM-Throttle	42020 U	Throttle with PWM interface	PWM outputs	1 - 2	Perkins, Caterpillar
SAEJ - Throttle	Custom	Throttle with SAEJ 1939 interface	CAN DeviceNet SAEJ 1939 outputs	1 - 2	SAEJ 1939 engines
NMEA - Throttle	Custom	Throttle with NMEA 2000 interface	CAN DeviceNet NMEA 2000 outputs	1 - 2	NMEA 2000 engines

CHART B - Throttle cables

MODEL	APPLICATION	LENGTH (m - ft)	P. No.	CONNECTORS
Universal V-Throttle cable	Not redundant 5V cable/1 engine	2 - 6.6 4 - 13.1	42029N 42030X	None
FPT V-Throttle cable	FPT engines 0 – 5 V cable (J-INV connector)	2 - 6.6 4 - 13.1	42350S 42351U	FPT, all engines with J-INV connector
FPT V-Throttle cable	FPT engines 0 – 5 V cable (J-D connector)	2 - 6.6 4 - 13.1	42348F 42349H	FPT, all engines with J-D connector
VW V-Throttle cable (4-5-6 cylinder)	VW engines 0 – 5 V cable	2 - 6.6 4 - 13.1	42033D 42034F	VW, 4, 5 and 6 cylinder
Mercruiser 4.2 Black V-Throttle cable	Mercruiser engines 0 – 5 V cable	2 - 6.6 4 - 13.1	42035H 42036K	Mercruiser 4.2 black engines
Mercruiser QSD V-Throttle cable	Mercruiser engines 0 – 5 V cable	2 - 6.6 4 - 13.1	42037M 42038P	Mercruiser QSD engines
Lombardini V-Throttle cable	Lombardini engines 0 – 5 V cable	2 - 6.6 4 - 13.1	42039S 42040A	180 and 240 HP Lombardini engines.
Yanmar V-Throttle cable	Yanmar engines 0 – 5 V cable	2 - 6.6 4 - 13.1	42041C 42042E	Yanmar BY engines.
Universal I/PWM-Throttle cable	PWM throttle cable with no connector	2 - 6.6 4 - 13.1	42043G 42044J	Compatible with CAT electronic engines C30/C32
Universal SAEJ1939-Throttle cable	SAEJ1939 cable with no connector	2 - 6.6 4 - 13.1	42045L 42046N	None
NMEA2000 Throttle cable	NMEA2000 cable	1 - 3.3 3 - 9.8 7 - 22.9	42047R 42048T 42049V	DeviceNet cable Drop type for NMEA2000 connection
Hyundai V-Throttle cable	Hyundai engines 0 – 5 V cable	2 - 6.6 4 - 13.1	42288P 42289S	Hyundai engines
VM V-Throttle cable	VM engines 0 – 5 V cable	2 - 6.6 4 - 13.1	42314M 42315P	VM engines
Perkins PWM-Throttle cable	Perkins engine PWM Throttle cable	2 - 6.6 4 - 13.1	42374 G 42373 E	Perkins engines

CHART C - Main system cables

DESCRIPTION	APPLICATION	LENGTH (m - ft)	P. No.	CONNECTORS
Main power supply cable	Main power supply of the system	1 - 3,3 3 - 9,8 7 - 22,9 10 - 32,8	42052H 42053K 42054M 42055P	One each battery
Power cable extension	Power extension cable for modules connection	1 - 3,3 3 - 9,8 7 - 22,9 10 - 32,8	42056S 42057U 42058W 42059Y	One each mechanical actuator or shift unit
Shift cable	Solenoid connection cable	1 - 3,3 3 - 9,8 7 - 22,9 10 - 32,8	42060G 42061J 42062L 42063N	One each solenoid shift
Shift cable with electric Troll	Shift and trolling solenoid connection cable	1 - 3,3 3 - 9,8 7 - 22,9 10 - 32,8	42064R 42065T 42066V 42067X	One each shift and trolling with solenoids
3 solenoid Shift cable (neutral solenoid)	3 solenoid connection cable	1 - 3,3 3 - 9,8 7 - 22,9 10 - 32,8	42072P 42073S 42074U 42075W	One each 3 solenoid shift
CAN cable	Network connection cable	1 - 3,3 3 - 9,8 7 - 22,9 10 - 32,8 15 - 49,2 20 - 65,6	73639T 73680P 73681S 71021K 71031N 71032R	CAN cable

Note:
Should the engine inverter need the neutral solenoid, the proper shift cable must be used.
Custom cabling can be done, upon request

CHART D - Troll cables

DESCRIPTION	APPLICATION	LENGTH (m - ft)	P. NO.	CONNECTORS
Universal V-Troll cable	0-5 V cable with no redundancy	2 - 6,6 4 -13,1	42068Z 42069B	None
Universal I-Troll cable	4-20 mA output cable, no connectors included	2 - 6,6 4 -13,1	42070K 42071M	None

Spare parts

MODEL	DESCRIPTION	PART No.	Q.ty
Cable connection kit	Kit to connect the mechanical cable to the actuator	41898 N	1 for each actuator
Conduit clamp kit	Conduit clamp kit for mechanical cable	41897 L	1 for each actuator

CHART E - Components for Trolling Valve Systems

ENGINE	NO. OF ENGINES	COMPONENTS	P. No.	Q.TY
Mechanical trolling valve	**Single Engine**	Mechanical actuator (Troll) CAN cable Power cable extension	42027J Chart C Chart C	1 1 1
	Twin Engines	Mechanical actuator Power Unit CAN cable Power supply cable (general) Power cable extension	42027J 42026G Chart C Chart C Chart C	2 0 (*) 2 0 (*) 2
	(*) When there are no more free sockets in the existing power unit, add one Power Unit with one or two power supply cables according to battery number. Refer to the diagram on installation manual.			
Electric troll (proportional solenoid)	**Single Engine**	Shift Unit CAN cable Power cable extension Cavo Shift con Troll	42023A Chart C Chart C Chart C	1(**) 1(**) 1(**) 1
	Twin Engines	Shift Unit CAN cable Power cable extension Power Unit Power supply cable (general) Shift cable with Troll	42023A Chart C Chart C 42026G Chart C Chart C	1(**) 1(**) 1(**) 0 (*) 0 (*) 2
	(*) When there are no more free sockets in the existing power unit, add one Power Unit with one or two power supply cables according to battery number. Refer to the diagram on installation manual.			
	(**) When a shift unit is already present in the system, it can control the electric troll by using the proper cable. When a shift box is not present, add one to the system with the shift and CAN cables.			
Electronic Troll (0-5V, 4-20mA)	**Single Engine**	E-Troll Unit CAN cable Troll cable	Custom made Chart C Chart D	1 1 1
	Twin Engines	E-Troll Unit CAN cable Troll cable	Custom made Chart C Chart D	1 1 2

ENGINE	NO. OF ENGINES	COMPONENTS	P. No.	Q.TY
PwA II-EE **Electronic throttle** **Electric shift**	**Single Engine**	Single control with trim (or no trim)	Select control	1
		Control Unit	42017F	1
		E-Throttle unit	Chart A	1
		E-Shift unit	42023A	1
		Throttle cable	Chart B	1
		Shift cable	Chart C	1
		Power supply cable (general)	Chart C	1
		CAN cable	Chart C	3
		Network terminators	42028L	1
		Power Unit (optional for second battery)	42026G	1
		Power cable extension (optional for second battery)	Chart C	1
		Power supply cable (optional for second battery)	Chart C	1
	Two Engines	Dual control with trim (or no trim)	Select control	1
		Control Unit	42017F	1
		E-Throttle unit	Chart A	1
		E-Shift unit	42023A	1
		Throttle cable	Chart B	2
		Shift cable	Chart C	2
		Power supply cable (general)	Chart C	1
		CAN cable	Chart C	3
		Network terminators	42028L	1
		Power Unit (optional for second battery)	42026G	1
		Power cable extension (optional for second battery)	Chart C	1
		Power supply cable (optional for second battery)	Chart C	1
PwA II-EM **Electronic throttle** **Mechanical shift**	**Single Engine**	Single control with trim (or no trim)	Select control	1
		Control Unit	42017F	1
		E-Throttle unit	Chart A	1
		Mechanical actuator	42027J	1
		Throttle cable	Chart B	1
		CAN cable	Chart C	3
		Power supply cable (general)	Chart C	1
		Network terminators	42028L	1
		Power Unit (optional for second battery)	42026G	1
		Power cable extension (optional for second battery)	Chart C	1
		Power supply cable (optional for second battery)	Chart C	1
	Two Engines	Dual control with trim (or no trim)	Select control	1
		Control Unit	42017F	1
		E-Throttle unit	Chart A	1
		Mechanical actuator	42027J	2
		Throttle cable	Chart B	2
		CAN cable	Chart C	4
		Power supply cable (general)	Chart C	1
		Network terminators	42028L	1
		Power Unit	42026G	1
		Power extension cable	Chart C	2
		Power supply cable (optional for second battery)	Chart C	1
For each additional station add:				
Single Engine:		**Single lever control station with trim (or no trim)**	**Select control**	**1**
		CAN cable	**Chart C**	**1**
Two Engines:		**Dual lever control station with trim (or no trim)**	**Select control**	**1**
		CAN cable	**Chart C**	**1**

Power A Mark II™ ORDER GUIDE:

ENGINE	NO. OF ENGINES	COMPONENTS	P. No.	Q.TY
PwA II-ME **Mechanical throttle** **Electronic shift**	**Single Engine**	Single control with trim (or no trim)	Select control	1
		Control Unit	42017F	1
		E-Throttle unit	42023A	1
		Mechanical actuator	42027J	1
		Throttle cable	Chart C	1
		CAN cable	Chart C	3
		Power supply cable (general)	Chart C	1
		Network terminators	42028L	1
		Power Unit (optional for second battery)	42026G	1
		Power cable extension (optional for second battery)	Chart C	2
		Power supply cable (optional for second battery)	Chart C	1
	Two Engines	Dual control with trim (or no trim)	Select control	1
		Control Unit	42017F	1
		E-Throttle unit	42023A	1
		Mechanical actuator	42027J	2
		Throttle cable	Chart C	2
		CAN cable	Chart C	4
		Power supply cable (general)	Chart C	1
		Network terminators	42028L	1
		Power Unit	42026G	1
		Power extension cable	Chart C	3
		Power supply cable (optional for second battery)	Chart C	1
PwA II-MM **Mechanical throttle** **Mechanical shift**	**Single Engine**	Single control with trim (or no trim)	Select control	1
		Control Unit	42017F	1
		Mechanical actuator	42027J	2
		CAN cable	Chart C	3
		Power supply cable (general)	Chart C	1
		Network terminators	42028L	1
		Power Unit	42026G	1
		Power extension cable	Chart C	2
		Power supply cable (optional for second battery)	Chart C	1
	Two Engines	Dual control with trim (or no trim)	Select control	1
		Control Unit	42017F	1
		Mechanical actuator	42027J	4
		CAN cable	Chart C	5
		Power supply cable (general)	Chart C	1
		Network terminators	42028L	1
		Power Unit	42026G	1
		Power extension cable	Chart C	4
		Power supply cable (optional for second battery)	Chart C	1
For each additional station add:				
Single Engine:		**Single lever control station with trim (or no trim)**	**Select control**	**1**
		CAN cable	**Chart C**	**1**
Two Engines:		**Dual lever control station with trim (or no trim)**	**Select control**	**1**
		CAN cable	**Chart C**	**1**

SUGGESTIONS AND WARNINGS WHEN SELECTING A MECHANICAL STEERING SYSTEM

Selection of the appropriate mechanical steering system is an important factor for the safety and functionality of your boat.
The combination of engine power, hull type and boat speed influence the correct selection of the steering system.
The load on the steering system increases with the boat speed and engine power; the torque generated by the propeller rotation in high power outboard applications can make it hard to steer.

Big boats with displacement hulls and inboard or non power assisted stern drive engines, can generate high rudder loads: in these cases a mechanical steering system will be inadequate and we suggest the use of an Ultraflex hydraulic steering system.

We always recommend consulting qualified personnel when selecting, installing and maintaining a steering system for your boat.

ADVANTAGES OF A PLANETARY GEAR DESIGN

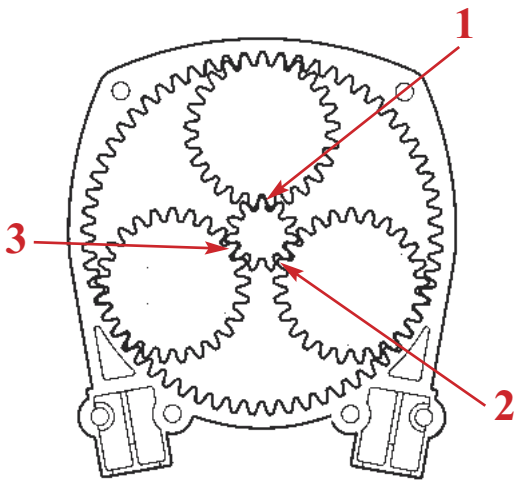

Ultraflex mechanical steering helms T71FC, T73NRFC, T91, T93ZT as well as dual cable versions and tilt wheel versions use a Planetary Gear Design. A Planetary Gear Design has three satellite gears that rotate on their axis and at the same time rotate around the central helm axis. This allows for equal distribution of engine torque over three points of the central gear, dividing and balancing the system loads. The benefits of this special design are increased system longevity, increased efficiency and less engine feedback compared to single pinion gear helms.

EFFICIENCY COMPARISON TESTS

Test configuration:
3 bends at 90°; 1000N load

NOTE: indicated figures have been obtained after 500 cycles of running from samples bought from after-market sources

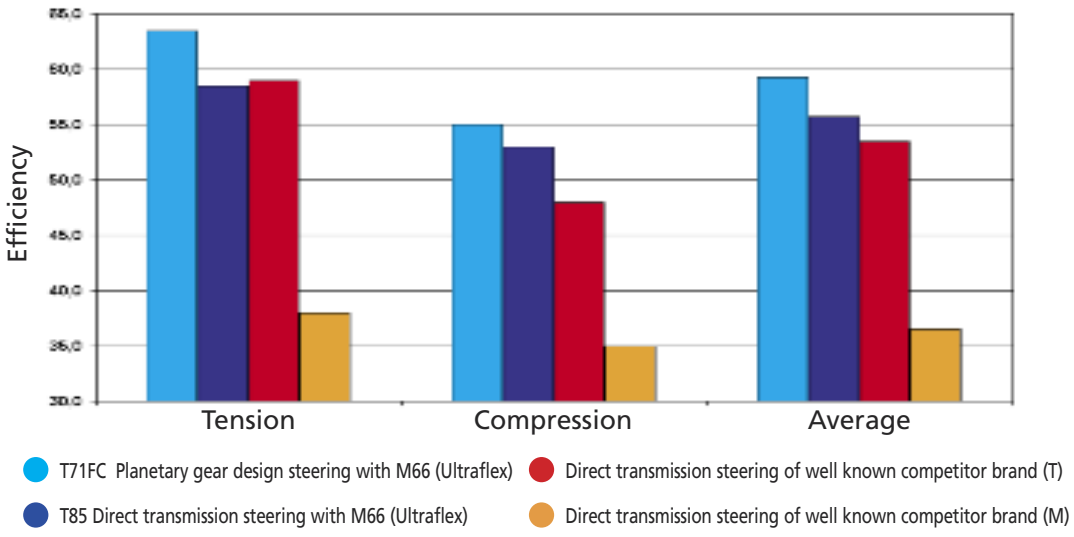

THE IMPORTANCE OF AN ANTI-FEEDBACK STEERING SYSTEM FOR INCREASED SAFETY

The steering system of a boat is the mechanism that determines the boat direction when the steering wheel is turned.
If, for any circumstance, the driver does not hold the steering wheel, a dangerous situation may occur caused by a sudden change of direction of the boat due to external forces (waves, currents, etc.) or internal forces such as rudder torque originated by the way of rotation of the propeller.
Engine torque usually generates a load on the steering system that must be continually compensated for by the driver even when the boat is going straight.
The additional effort by the driver to maintain a true course can often cause fatigue.

With **Ultraflex Anti-feedback** steering helms T73NRFC, T74NRFC, T83NRFC, T93ZT, T103ZT, T88NR the loads applied to the steering system are no longer a problem.
A special patented device allows the helm shaft to lock until turned by the driver, maintaining the boat direction and neutralizing the feedback loads on the steering cable.
This mechanism is engaged when the driver is not turning the wheel and is automatically disengaged as soon as the driver applies pressure on the wheel to change direction of the boat.
The **Ultraflex Anti-feedback** mechanism makes driving a boat safer and easier.

USE AND MAINTENANCE

The steering cable must be installed avoiding excessive and/or tight bends. This will provide the driver with easy handling at all speed, helping to reduce inefficiency and excess play in the system.

Marine corrosion may cause the materials to deteriorate affecting maneuvering efficiency and in the worst case, system failure. By following the engine manufacturer specifications, the steering cable end fittings and the engine cable support must be cleaned and greased periodically; these simple operations minimize wear and corrosion in the system.

The steering cable must be regularly inspected. If steering becomes hard, inconsistent, cuts on the conduit surface are noticed, or any other component found damaged, the cable must be replaced immediately.

When storing your boat for an extended period of time we recommend removing the steering cable end fitting from its engine side support and cleaning it adequately.

SELECTION OF STEERING SYSTEM AND CABLE LENGTH MEASUREMENT

APPLICATION	ENGINE POWER	STEERING SYSTEM	
OUTBOARD	up to 40 kW (55cv)	T67	Ultraflex hydraulic steering systems are recommended for boats that exceed 50 mph. Always follow engine manufacturer's instructions.
	BOAT LENGTH		
	up to 30' (9m)	T85 - T71FC - T81FC - T73NRFC - T83NRFC - T86 - T88NR - T96 - T98NR - T91 T93ZT - T101 - T103ZT	
		Twin cable rotary steering systems	
INBOARD	up to 35' (10.5m)	T71FC - T81FC - T73NRFC - T83NRFC - T86 - T88NR - T96 - T98NR - T91 - T93ZT - T101 - T103ZT	
		Twin cable rotary steering systems	
STERNDRIVE POWER ASSISTED		T85 T71FC - T81FC - T86 - T96 T91 - T101	
		Twin cable rotary steering systems	

NOTE: sterndrive engines not equipped with power steering can create very high steering loads. Our hydraulic steering systems are recommended for these type of boats. For any further information please contact our Technical Service Department.

- Speed, hull, horsepower, engine type, displacement and size are major factors in boat performance and handling characteristics. The above selection guide should be used as a general reference only.
- One of the major factors in selecting a steering system is proper cable length. Due to specific routing in each boat, these approximate lengths will vary. Final selection should be made with the assistance of a qualified technician.
- Ultraflex mechanical steering systems should not be used on boats equipped with engines that exceed the maximum horsepower rating of the boat.

HOW TO MEASURE FOR NEW STEERING CABLE INSTALLATION

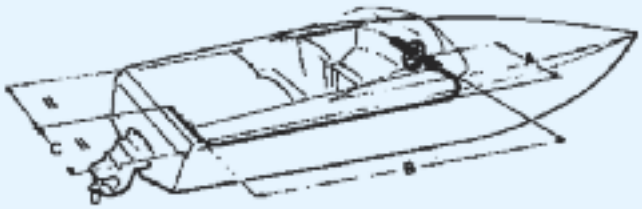

Add. A + B + C and subtract 10 cm (4") for each 90° bend in the cable. For installation through the engine tilt tube, add 30,5 cm (1 ft) to the measure calculated above.
To order in foot length, divide by 30,5 and round off to next whole foot.

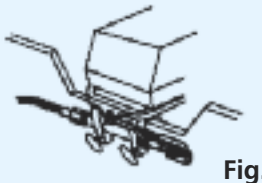

Fig. 1

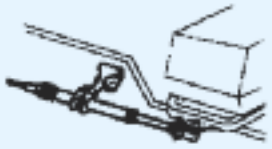

Fig. 2

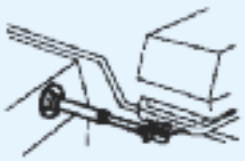

Fig. 3

TILT TUBE MOUNTING - Fig. 1
Example (dimensions in cm):
A (50) + B (250) + C (80) = 380 - 20 for two 90° bends = 360 + 30,5
For a thru-tube installation
390,5 cm : 30,5 = 12,8 ft;
round off to 13 ft

TRANSOM SUPPORT OR SPLASHWELL MOUNTING - Fig. 2-3
Example (dimensions in cm):
A (50) + B (250) + C (80) = 380 - 20 for two 90° bends = 360:
30,5 = 11,8 ft; round off to 12 ft

REPLACEMENT STEERING CABLES

ULTRAFLEX REPLACEMENT CABLE	STEERING HELM	ADAPTOR REQUIRED
M58 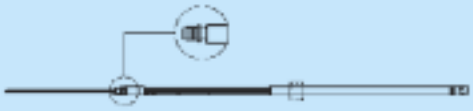	T67 Ultraflex C230/C231 Morse® Compac - T® Teleflex® 805 TX®	none*
M66 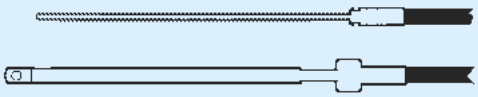	T85 - T71FC - T72FC - T73NRFC - T74NRFC - T81FC - T83NRFC - Ultraflex Safe - TQC® - NFB Safe -TII® - NFB 4.2® Teleflex® - D290 Morse®	none
	T71 - T72 - T73NR - T74NR - T81 - T83NR Ultraflex (discontinued)	**K66** - 38432Q
M47 -DISCONTINUED **USE M66+K66** 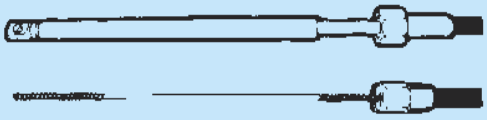	T71 - T72 - T73NR - T74NR - T81- T83NR Ultraflex (discontinued)	none
	T85 - T71FC - T72FC - T73NRFC - T74NRFC - T81FC - T83NRFC Ultraflex	**K46**-35679L
	Safe - T® - Big-T® - Teleflex®	none
M90 Mach 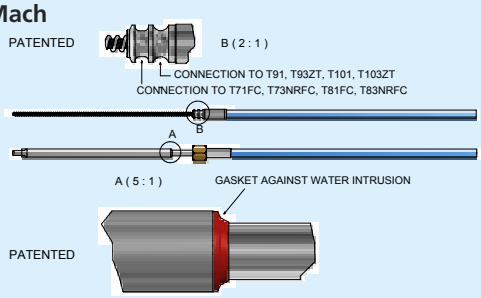	T91 - T93ZT T101 - T103ZT T85 - T71FC - T72FC - T73NRFC - T74NRFC - T81FC - T83NRFC Ultraflex Safe - TQC® - NFB Safe TII® NFB 4.2® Teleflex® - D290 Morse®	none
TM86 	G86 - G88NR - G96 - G98NR Ultraflex	none
	NOTE: will NOT work with dual cable helms	

WARNING: **We inform you the ULTRAFLEX guarantee is null and void if some ULTRAFLEX components are installed on a steering system together with products of other brands, with the exception of those brands clearly specified in the above chart.**

HOW TO MEASURE FOR REPLACEMENT STEERING CABLES

D = Conduit length

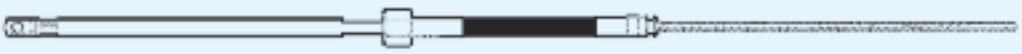

ORDER LENGTH: "D" dimension + 56 cm
To order in foot length, divide for 30,5 and round up to the next whole foot

Example: D= 305 cm + 56 cm= 361 : 30,5 = 11'8". Round up to 12 ft

T67 STEERING SYSTEM

A COMPLETE STEERING SYSTEM CONSISTS OF:

- Steering helm with friction:
  T67 - 35809 J - Black bezel
  T67W - 37925 M - White bezel
- Steering cable:
  M58 available in one foot increments
- Optional steering wheel (see index)
- Engine connection kits (see index)

FEATURES AND TECHNICAL SPECIFICATIONS:

- All stainless steel output end of cable as per ABYC P17 safety standards
- Corrosion resistant materials
- Standard friction externally adjustable
- 90° bezel
- Four optional helm positions to facilitate steering cable installation
- Lock-to-lock steering wheel turns: approx. 2,5
- Stroke: 230 mm (9")
- Maximum allowable steering wheel diameter: 380 mm (15")
- Minimum steering cable bend radius: 200 mm (7,9")
- Available in package with ROTECH-IV

- Exceeds EN 29775 safety standards

- APPLICATIONS: for use with outboard engines up to 40 kW (55 hp) with the exception of EVINRUDE E-TEC™ 50 for which the use of T85, T71FC or T91 is recommended.

T67

T67W

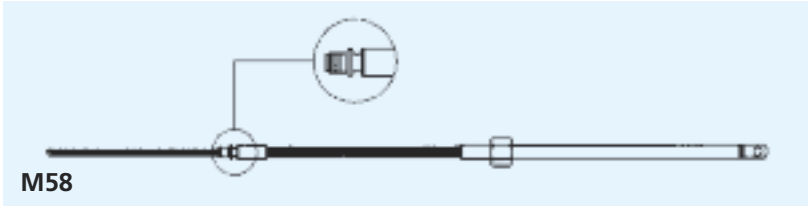

M58

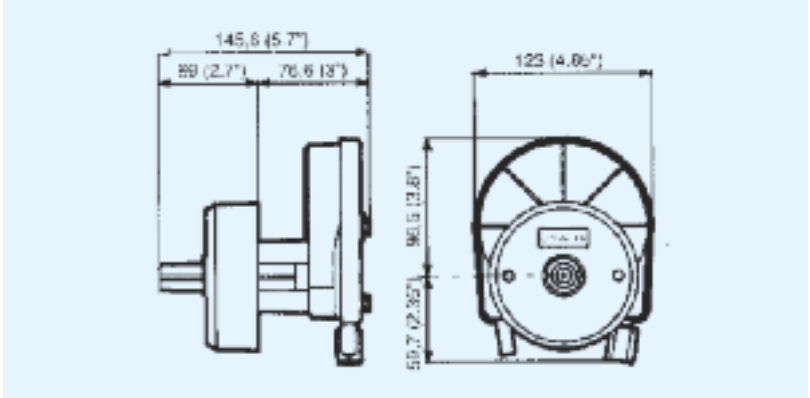

T85 ROTARY STEERING SYSTEM

A COMPLETE STEERING SYSTEM CONSISTS OF:

- Steering helm:
  T85 - 38439 Z - Black bezel
  T85W - 39213 M - White bezel
- Steering cable: **M66**
- Optional steering wheel (see index)
- Engine connection kits (see index)

FEATURES AND TECHNICAL SPECIFICATIONS:

- All stainless steel cable output ends
- Corrosion resistant materials
- Particularly suitable where clearance is limited
- Lock-to lock steering wheel turns: approx. 3
- Stroke 228 mm (9")
- Maximum allowable steering wheel diameter: 406 mm (16")
- Minimum steering cable bend radius: 200 mm (7.9")
- Minimal feedback
- Compact for mounting
- T85 steering system is not to be used on boats equipped with engines that exceed the maximum horsepower rating of the boat
- Available in package with ROTECH-V

- Exceeds EN 28848 safety standards
- Exceeds ABYC P17 safety standards

T85

T85W

M66

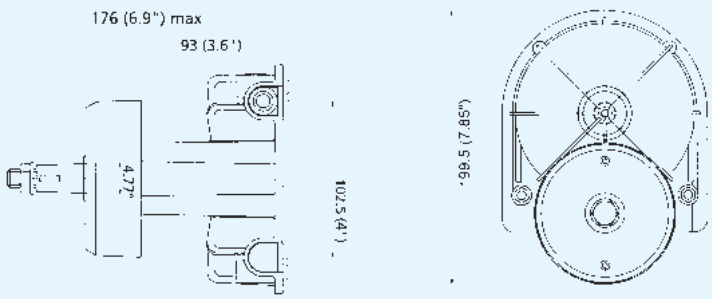

T85

T71FC AND T72FC ROTARY STEERING SYSTEMS

FEATURING PLANETARY GEAR DESIGN

A COMPLETE STEERING SYSTEM CONSISTS OF:

- Steering helm:
  T71FC - 38867 H - single cable steering helm
  T72FC - 38868 K - dual cable steering helm
- Mounting bezel:
  X34 - 36654 B - black, 90° mounting
  X34W - 40654 C - white, 90° mounting
  X35 - 36655 C - black, 20° mounting
- Steering cable: **M66**
  NOTE: two M66 are needed with the T72FC system
- Optional steering wheel (see index)
- Engine connection kits (see index)

FEATURES AND TECHNICAL SPECIFICATIONS:

- Fast connect, simple installation
- All stainless steel cable output ends
- Corrosion resistant materials
- Particulary suitable where clearance is limited
- Optional 90° or 20° installation
- Standard 3/4" tapered shaft
- Lock-to-lock steering wheel turns: approx. 3,8
- Stroke: 228 mm (9")
- Maximum allowable steering wheel diameter: 406 mm (16")
- Minimum steering cable bend radius: 200 mm (7.9")
- Minimal feedback
- Compact for mounting
- T71FC and T72FC steering systems are not to be used on boats equipped with engines that exceed the maximum horsepower rating of the boat
- For boats faster than 50 mph our hydraulic steering systems are recommended
- T71FC steering system is also available in package with ROTECH-I

- Exceeds EN 28848 safety standards
- Exceeds ABYC P17 safety standards

T71FC

T72FC

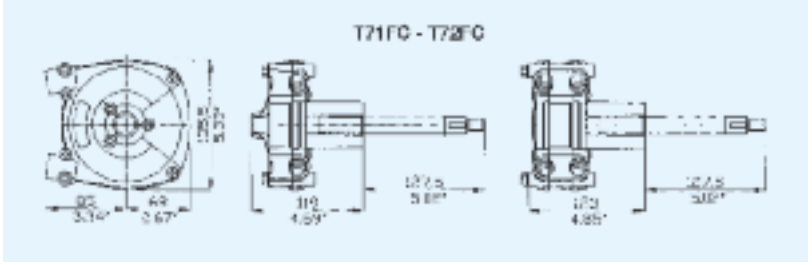

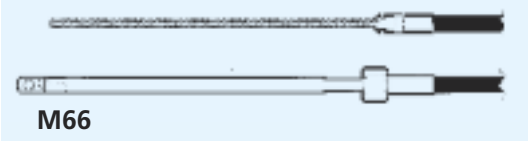

M66

T73NRFC AND T74NRFC ANTI-FEEDBACK STEERING SYSTEMS

FEATURING PLANETARY GEAR DESIGN

A COMPLETE STEERING SYSTEM CONSISTS OF:

- Steering helm:
  T73NRFC - 38869 M
  anti-feedback single cable steering helm
  T74NRFC - 38870 W
  anti-feedback dual cable steering helm
- Mounting bezel:
  X34 - 36654 B - black, 90° mounting
  X34W - 40654 C - white, 90° mounting
  X35 - 36655 C - black, 20° mounting
- Steering cable: **M66**
  NOTE: two M66 are needed with the T74NRFC system
- Optional steering wheel (see index)
- Engine connection kits (see index)

FEATURES AND TECHNICAL SPECIFICATIONS:

- Easy and safe steering : a **patented anti-feedback mechanism** eliminates the continuous load on the operator caused by the propeller torque
- Fast connect, simple installation
- Compact rotary helm unit: the central location of the steering shaft makes these systems the most compact in their class
- Most suitable where clearance is limited
- Ideal for outboards and surfacing propellers
- Optional 90° or 20° installation
- Standard 3/4" tapered shaft
- All stainless steel cable output ends
- Made exclusively in corrosion resistant materials
- Lock-to-lock steering wheel turns: approx 3,8
- Stroke: 228 mm (9")
- Maximum allowable steering wheel diameter: 406 mm (16")
- Minimum steering cable bend radius: 200 mm (7.9")
- T73NRFC and T74NRFC steering systems are not to be used on boats equipped with engines that exceed the maximum horsepower rating of the boat
- For boats faster than 50 mph our hydraulic steering systems are recommended
- Available in package with ROTECH-III

- Exceeds EN 28848 safety standards
- Exceeds ABYC P17 safety standards

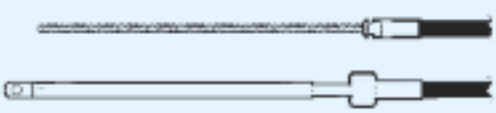

M66

T73NRFC

T74NRFC

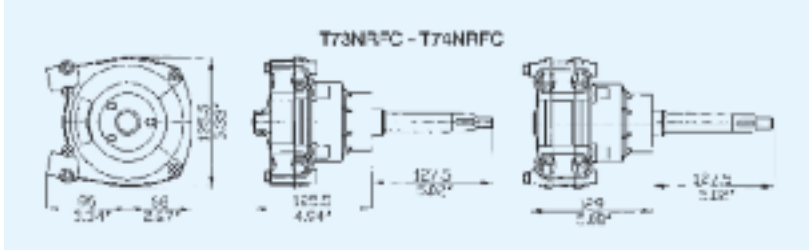

T81FC - T83NRFC (ANTI-FEEDBACK) TILT STEERING SYSTEMS

FEATURING PLANETARY GEAR DESIGN

A COMPLETE STEERING SYSTEM CONSISTS OF:

- Steering helm:
  T81FC - 38957 J
  single cable steering helm
  T83NRFC - 38959 N
  anti-feedback single cable steering helm
- Tilt mechanism:
  X52 - 39250 U
  NOTE: X52 tilt mechanism fits Ultraflex tilt mount rotary and rack and pinion steering helms as well as Ultraflex tilt mount hydraulic pumps except SilverSteer™ and MasterDrive™ steering systems
- Steering cable: **M66**
- Optional steering wheel (see index)
- Engine connection kits (see index)

FEATURES AND TECHNICAL SPECIFICATIONS:

- Tilt range of 48° and five locking positions
- Fast connect, simple installation
- Tilt device eliminates underdash movement
- Standard 3/4" tapered shaft - stainless steel
- All stainless steel cable output ends
- Corrosion resistant materials
- Lock-to-lock steering wheel turns: approx. 3,8
- Stroke: 228 mm (9")
- Maximum allowable steering wheel diameter: 406 mm (16")
- Minimum steering cable bend radius: 200 mm (7.9")
- T81FC and T83NRFC steering systems are not to be used on boats equipped with engines that exceed the maximum horsepower rating of the boat
- For boats faster than 50 mph our hydraulic steering systems are recommended

- Exceeds EN 28848 safety standards
- Exceeds ABYC P17 safety standards

T81FC with X52

X52

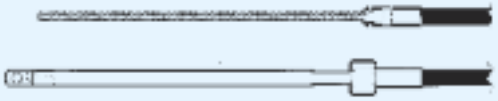

M66

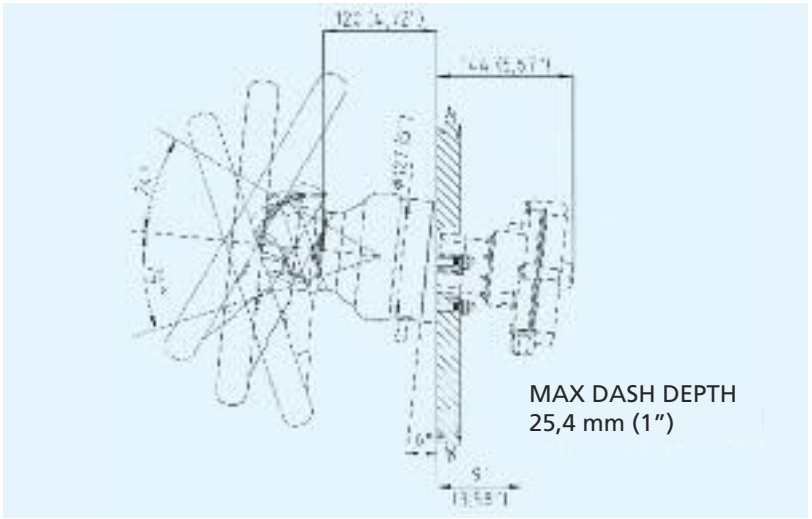

T91 AND T93ZT (ZERO TORQUE) ROTARY STEERING SYSTEMS

FEATURING PLANETARY GEAR DESIGN

A COMPLETE STEERING SYSTEM CONSISTS OF:

- Steering helm:
  T91 - 42647 S - single cable steering helm
  T93ZT - 42648 U - zero torque single cable steering helm
- Mounting bezel:
  X34 - 36654 B - black, 90° mounting
  X34W - 40654 C - white, 90° mounting
  X35 - 36655 C - black, 20° mounting
  X91 - 42850 N - chrome plated - 90° mounting
- Steering cable: **M90 Mach** (patented)
  ATTENTION: M90 Mach steering cable is suitable for use also with T85, T71FC, T72FC, T73NRFC, T74NRFC, T81FC, T83NRFC Ultraflex steering helms. M66 steering cable is not fit for T91, T93ZT, T101, T103ZT steering systems.
- Optional steering wheel (see index)
- Engine connection kits (see index)

FEATURES AND TECHNICAL SPECIFICATIONS:

- Specifically designed for high performance and high efficiency applications
- M90 mach cable (patented) performance and durability increased by top quality materials and construction.
- Fast connect, simple installation, patented end fitting.
- Engine side stainless steel cable output end featuring patented gasket
- Corrosion resistant materials
- Particularly suitable where clearance is limited
- Optional 90° or 20° installation
- Standard 3/4" tapered shaft
- Lock-to-lock steering wheel turns: approx. 4,2
- Stroke: 228 mm (9")
- Maximum allowable steering wheel diameter: 406 mm (16")
- Minimum steering cable bend radius: 200 mm (7.9")
- Minimal feedback
- Compact for mounting
- T91 and T93ZT steering systems are not to be used on boats equipped with engines that exceed the maximum horsepower rating of the boat
- For boats faster than 50 mph our hydraulic steering systems are recommended
- Exceeds EN 28848 safety standards
- Exceeds ABYC P17 safety standards

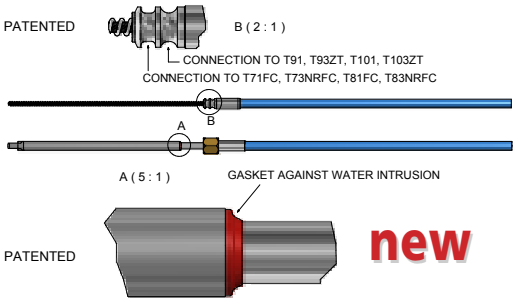

M90 Mach

T93ZT

T91

X90 - 42646 P
Steering lock device (optional)

X91 – 42850 N
Bare chrome plated mounting bezel also available (optional)

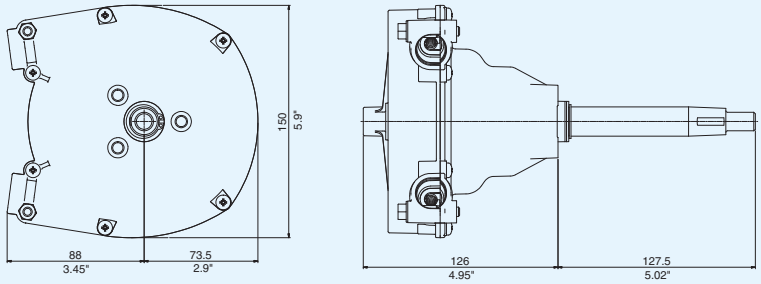

T91 - T93ZT

T101 AND T103ZT (ZERO TORQUE) TILT STEERING SYSTEMS

FEATURING PLANETARY GEAR DESIGN

A COMPLETE STEERING SYSTEM CONSISTS OF:

- Steering helm:
  T101 - 42839 B - single cable steering helm
  T103ZT - 42840 K - zero torque single cable steering helm
- Tilt mechanism:
  X52 - 39250 U

  NOTE: X52 tilt mechanism fits Ultraflex tilt mount rotary and rack and pinion steering helms as well as Ultraflex tilt mount hydraulic pumps except SilverSteer™ and MasterDrive™ steering systems
- Steering cable: **M90 Mach** (patented)
  ATTENTION: M90 Mach steering cable is suitable for use also with T85, T71FC, T72FC, T73NRFC, T74NRFC, T81FC, T83NRFC Ultraflex steering helms. M66 steering cable is not fit for T91, T93ZT, T101, T103ZT steering systems.
- Optional steering wheel (see index)
- Engine connection kits (see index)

FEATURES AND TECHNICAL SPECIFICATIONS:

- Specifically designed for high performance and high efficiency applications
- M90 mach cable (patented) performance and durability increased by top quality materials and construction.
- Tilt range of 48° and five locking positions
- Fast connect, simple installation, patented end fitting.
- Tilt device eliminates underdash movement
- Standard 3/4" tapered shaft - stainless steel
- Engine side stainless steel cable output end featuring patented gasket
- Corrosion resistant materials
- Lock-to-lock steering wheel turns: approx. 4,2
- Stroke: 228 mm (9")
- Maximum allowable steering wheel diameter: 406 mm (16")
- Minimum steering cable bend radius: 200 mm (7.9")
- T101 and T103ZT steering systems are not to be used on boats equipped with engines that exceed the maximum horsepower rating of the boat
- For boats faster than 50 mph our hydraulic steering systems are recommended

- Exceeds EN 28848 safety standards
- Exceeds ABYC P17 safety standards

T101 with X52

T101

T103ZT

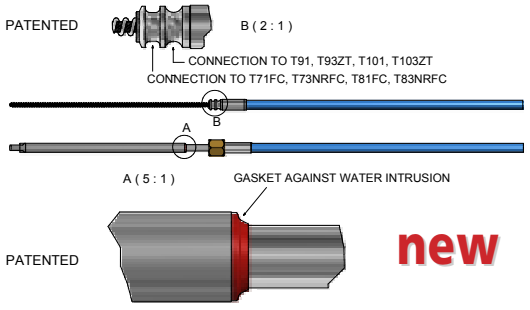

M90 Mach

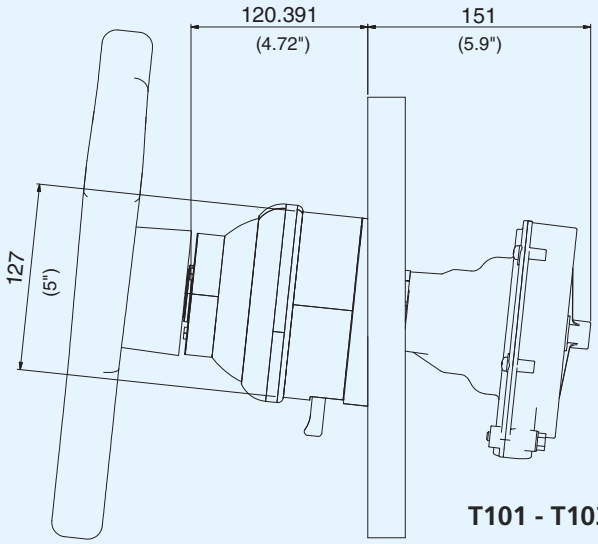

T101 - T103ZT

T86 AND T88NR (ANTI-FEEDBACK) RACK AND PINION STEERING SYSTEMS

A COMPLETE STEERING SYSTEM CONSISTS OF:

- Preassembled helm with steering cable: **TM86**
- Helm assembly:
  G86 - 39418 G standard
  G88NR® - 39419 J - anti-feedback
- Mounting bezel:
  X34 - 36654 B - black, 90° mounting
  X34W - 40654 C - white, 90° mounting
  X35 - 36655 C - black, 20° mounting
- Optional steering wheel (see index)
- Engine connection kits (see index)

FEATURES AND TECHNICAL SPECIFICATIONS:

- Easy and safe steering: patented anti-feedback G88NR helm eliminates the continuous load on the operator caused by the propeller torque
- All stainless steel cable output ends
- Made exclusively in corrosion resistant materials
- Optional 90° or 20° installation
- Standard 3/4”tapered shaft
- Lock-to-lock steering wheel turns: 3,5
- Stroke: 210 mm (8.2”)
- Maximum allowable steering wheel diameter: 420 mm (16.5”)
- Minimum steering cable bend radius: 200 mm (7,9”)
- T86 and T88 NR steering systems are not to be used on boats equipped with engines that exceed the maximum horsepower rating of the boat

- Exceeds EN 28848 safety standards
- Exceeds ABYC P17 safety standards

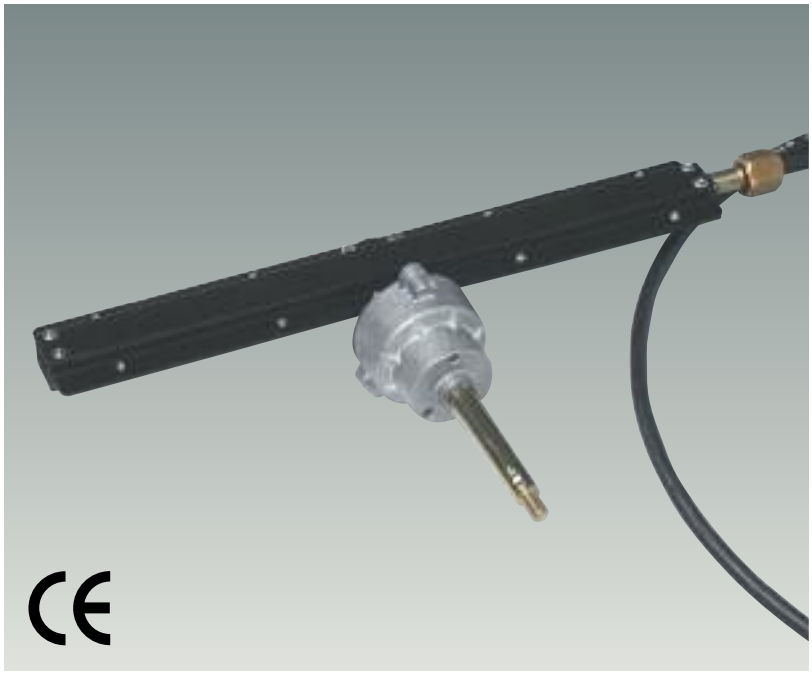

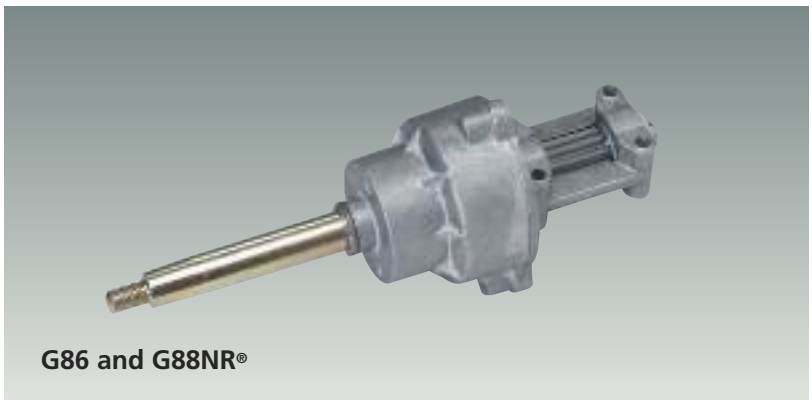

G86 and G88NR®

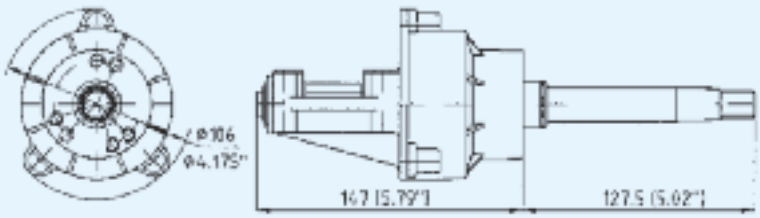

G86 and G88NR®

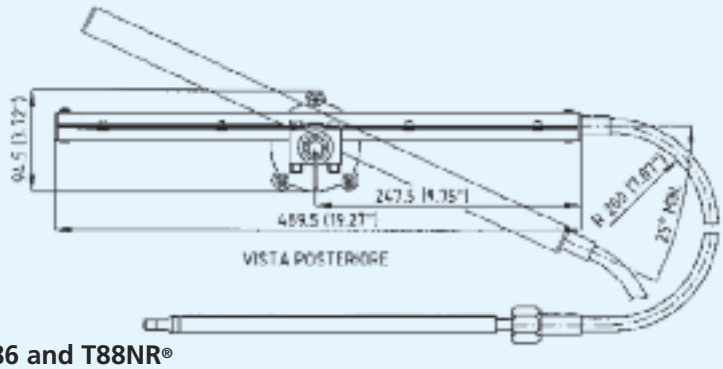

T86 and T88NR®

T96 AND T98NR (ANTI-FEEDBACK) RACK AND PINION TILT STEERING SYSTEMS

A COMPLETE STEERING SYSTEM CONSISTS OF:

- Preassembled helm with steering cable: **TM86**
- Helm assembly:
  G96 - 39650 L standard
  G98NR® - 39649 C anti-feedback
- Tilt mechanism:
  X52 - 39250 U
  NOTE: X52 tilt mechanism fits Ultraflex tilt mount rotary and rack and pinion steering helms as well as Ultraflex tilt mount hydraulic pumps except SilverSteer™ and MasterDrive™ steering systems
- Optional steering wheel (see index)
- Engine connection kits (see index)

FEATURES AND TECHNICAL SPECIFICATIONS:

- Easy and safe steering: the patented anti-feedback G98NR helm eliminates the continuous load on the operator caused by the propeller torque
- Fast, simple installation
- Tilt range of 48° and five locking positions
- Tilt device eliminates underdash movement
- Standard 3/4" tapered shaft - stainless steel
- All stainless steel cable output ends
- Made exclusively in corrosion resistant materials
- Lock-to-lock steering wheel turns: 3,5
- Stroke: 210 mm (8.2")
- Maximum allowable steering wheel diameter: 420 mm (16.5")
- Minimum steering cable bend radius: 200 mm (7.9")
- T96 and T98NR® steering systems are not to be used on boats equipped with engines that exceed the maximum horsepower rating of the boat

- Exceeds EN 28848 safety standards
- Exceeds ABYC P17 safety standards

T96 and T98NR®

X52

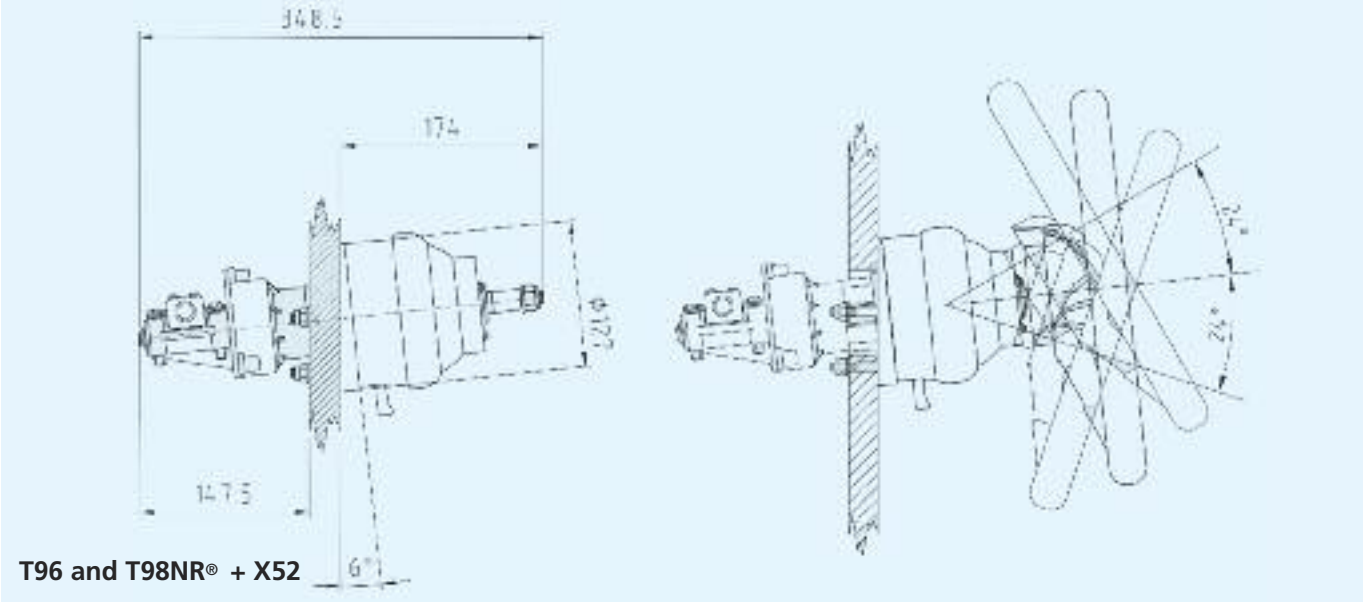

T96 and T98NR® + X52

ACCESSORIES FOR MECHANICAL STEERING SYSTEMS

STEERING CABLE SUPPORTS

S39 - 31916 F
Clamp block in marine aluminum and stainless steel

S40 - 31917 G
Splashwell mounting, corrosion resistant

S55 - 34744 A
90° rudder support, corrosion resistant

S61 - 36191 S
Clamp block, corrosion resistant painted steel

S62 - 38830 H
Same design as S61, smaller dimensions

S39T - 53930 J - Tube only for S39

S40T - 53935 O - Tube only for S40

S39

S40

S55

Steering cable supports with stainless steel tube also available:

S39SS - 41551 X
S40SS - 41552 Z
S55SS - 41553 B
S61SS - 41554 D
S62SS - 41555 F
S39TSS - 72971 W Stainless steel tube for S39SS
S40TSS - 72972 Y Stainless steel tube for S40SS

S61

S62

ENGINE CONNECTION KITS

A50 - 31473 Q
Connection kit for Yamaha® engines

A73SS - 41255 T
Stainless steel tiller arm for some Mercury® engines

A74SS - 41256 V
Stainless steel tiller arm for some Johnson®, Evinrude®, BRP® engines

A75 - 34459 X Clevis

WARNING: A73SS and A74SS tiller arms are recommended for mechanical steering systems only

A73SS/A74SS - INOX

A50

A75

STEERING CABLE ADAPTORS

K46 – 35679 L
Adaptor to connect M47 steering cables (discontinued) to Morse® D290 and Ultraflex® FC type steering helms

K66 – 38432 Q
Adaptor to connect M66 steering cables to Ultraflex® threaded steering helms (discontinued)

K46

K66

MONOFILAMENT POLYESTER BRAIDED SLEEVINGS FOR CABLES

TECHNICAL FEATURES

- Temperature class: F
- Continuous working temperature rating: -50°C +155°C with peaks at +180°C
- Halogen free
- Flammability: self extinguishing
- Good mechanical resistance
- Excellent resistance to abrasion
- Good resistance to solvent
- Non watertight
- Very flexible
- Expansion ratio: from 1 to 2
- Use: hot cutting to avoid fraying
- Colour: black

APPLICATIONS

STANDARDS

- Compliant with RoHS 2002/95/CE specifications
- NF EN 60684-1 (10-2003)
- NF EN 60684-2 (01-1998) modified by NF EN 60684-2/A1 (12-2003) NF EN 60684-2/A2 (05/2006)
- NF EN 60684-3 sheets 340 to 342 (4-2003)

NOMINAL INTERNAL DIAMETER	PART No 1 m legth	BULK PART No. ROLLS	ROLL LENGTH metres	ROLL WEIGHT Kg
10 mm (0.39")	68146 N	68180 N	100 m	8,0
15 mm (0.59")	68147 R	68181 R	50 m	6,3
20 mm (0.78")	68148 T	68182 T	50 m	8,9
25 mm (0.98")	68149 V	68183 V	50 m	10,1
30 mm (1.18")	68150 D	68184 X	50 m	13,5

Available in UFLEX

TYPICAL INSTALLATIONS

INSTALLATION	CABLE SUPPORT + ENGINE CONNECTION KIT	INSTALLATION	CABLE SUPPORT + ENGINE CONNECTION KIT
A	S39 or S61 or S62 + A75	C	A73SS or A74SS
B	S40 + A75	D	S55 + A75

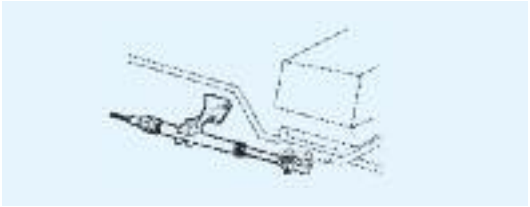

A = With clamp block

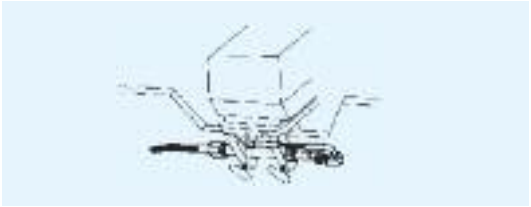

C = With tiller arm

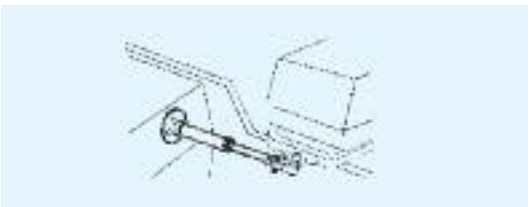

B = With splashwell

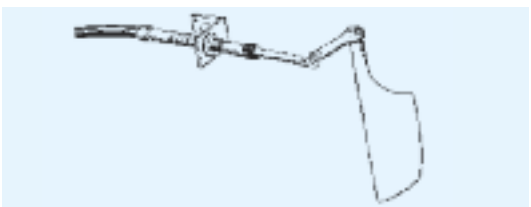

D = With 90° rudder support

A88 - A92 TIE BARS FOR TWIN OUTBOARD ENGINES

Universal tie bars applicable to twin outboard engines using mechanical steering.
For applications with hydraulic steering systems please refer to the hydraulic steering system section.

A88 - 40128 E

- Adjustable from 650 mm (25.6”) to 950 mm (37.4”) engine centers
- All stainless steel components
- Kit includes all mounting hardware

WARNING: On those applications where the clearance between engine tiller arm and cowling is not sufficient fot the use of the **A88**, the **A92** tie bar is recommended

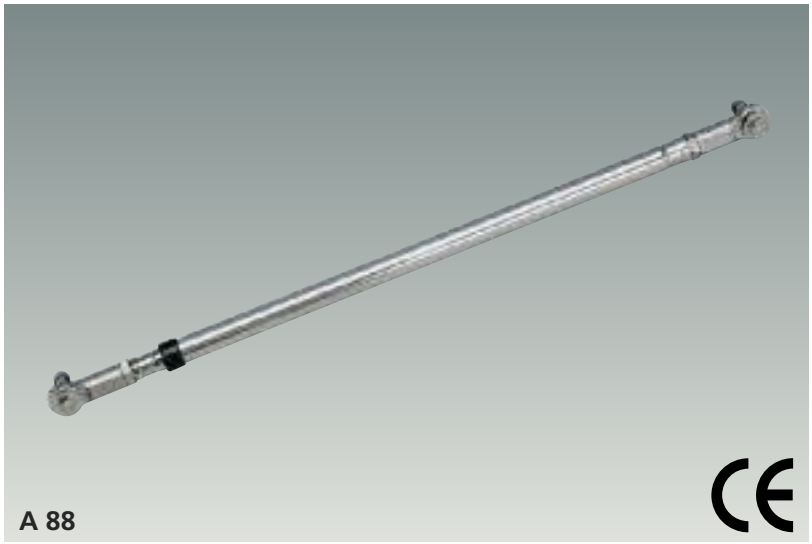

A92/700 - 40892 V
A92/950 - 40893 X

- Easily adjustable before or after installation
- All stainless steel components
- **A92/700:** Adjustable from 550 mm (21.6”) to 700 mm (27.5”) engine centers
- **A92/950:** Adjustable from 700 mm (27.5”) to 950 mm (37.4”) engine centers

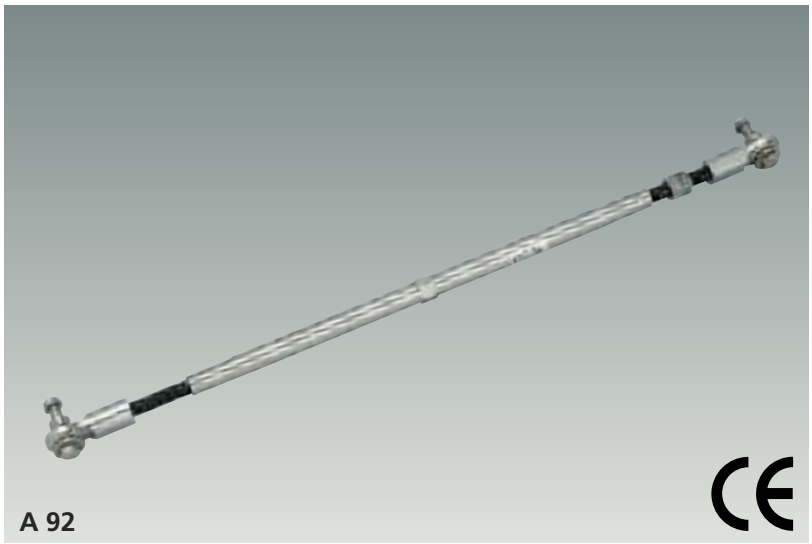

WIRE TYPE STEERING GROMMETS AND RINGS

BLACK GROMMETS
R1 B - 38060 I - Ø 152 mm (6”); h 110 mm (4.3”)
R2 B - 38061 J - Ø 105 mm (4.1”); h 65 mm (2.5”)
R3 B - 38062 K - 2 holes Ø 105 mm (4.1”); h 52 mm (2”)
R4 B - 38827 V - Adjustable Ø 105 mm (4.1”); h 68 mm (2.6”)

WHITE GROMMETS
R1 W - 38953 A - Ø 152 mm (6”); h 110 mm (4.3”)
R2 W - 38954 C - Ø 105 mm (4.1”); h 65 mm (2.5”)
R3 W - 38955 E - 2 holes Ø 105 mm (4.1”); h 52 mm (2”)
R4 W - 38956 G - Adjustable Ø 105 mm (4.1”); h 68 mm (2.6”)

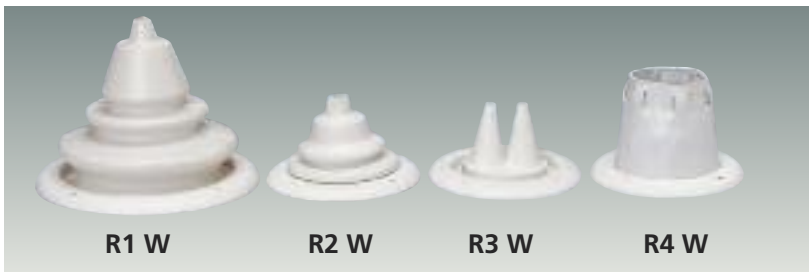

GREY GROMMETS
R1 G - 39279 V - Ø 152 mm (6”); h 110 mm (4.3”)
R2 G - 39280 D - Ø 105 mm (4.1”); h 65 mm (2.5”)
R3 G - 39281 F - 2 holes Ø 105 mm (4.1”); h 52 mm (2”)

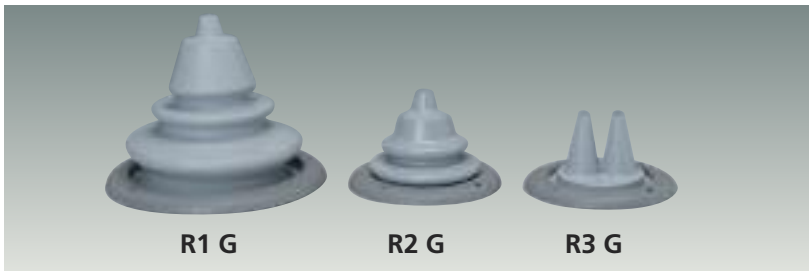

PACKAGED MECHANICAL STEERING SYSTEMS

ROTECH

ULTRAFLEX ROTARY STEERING SYSTEM PACKAGED IN A BOX

A convenient kit form, especially suitable as replacement steering, that includes helm, bezel and cable.
The cable is available in 1-ft increments from 8 to 20 feet (specify cable length when ordering)

The wheel is not included

ROTECH - I
T71FC - helm
X34 - 90° bezel
M66 - steering cable

ROTECH - III
T73NRFC® - non-reversible helm
X34 - 90° bezel
M66 - steering cable

ROTECH - IV
T67 - helm and bezel
M58 - steering cable

ROTECH - V
T85 - helm and bezel
M66 - steering cable

ROTECH - I

ROTECH - III

ROTECH - IV

ROTECH - V

ULTRAFLEX
UP Series Helm

MAX HORSEPOWER	KIT	HELM	CYLINDER (1)	FLEX HOSES (2)	OIL litres	WHEEL TURNS	OPTIONAL
115 hp	GOTECH-OBF	UP18	UC81-OBF	KIT OB-GT/M-60	2	4,5	Steering wheel Thru hull R5; R5SS
	GOTECH-OBS	UP18	UC68-OBS	KIT OB-GT/M-60	2	3,7 / 5,5	
	GOTECH-I	UP18	UC69-I	KIT OB-GT/M-60	2	3,8	
150 hp	HYCO-OBF	UP20F	UC94-OBF	KIT OB	2	4,7	Steering wheel Flange X64 Thru hull R5; R5SS; R8; R9
	HYCO-OBS	UP20F	UC68-OBS	KIT OB	2	3,4 / 5,0	
	HYCO-I	UP20F	UC69-I	KIT OB	2	3,5	
	HYCO-OBF/M	UP20F	UC94-OBF	KIT OB/M-60 (90)	2	4,7	
	HYCO-OBS/M	UP20F	UC68-OBS	KIT OB/M-60 (90)	2	3,4 / 5,0	
	HYCO-I/M	UP20F	UC69-I	KIT OB/M-60 (90)	2	3,5	
300 hp	NAUTECH-1	UP28F	UC128-OBF	KIT OB	2	4,3	Steering wheel Flange X64; X57 Thru hull R5; R5SS; R8; R9
	NAUTECH-3	UP25F	UC128-OBF	KIT OB	2	4,8	
	NAUTECH-1/M	UP28F	UC128-OBF	KIT OB/M-60 (90, 150)	2	4,3	
	NAUTECH-3/M	UP25F	UC128-OBF	KIT OB/M-60 (90, 150)	2	4,8	
>300 hp	SilverSteer™ and MasterDrive™ steering systems are recommended						

NOTE:
1) Please refer to cylinder application chart
2) See available lengths on appropriate section

GOTECH-OBF

GOTECH-OBS

GOTECH-I

HYCO-OBF

HYCO-OBS

HYCO-I

HYCO-OBF/M

HYCO-OBS/M

HYCO-I/M

NAUTECH-1
NAUTECH-3

NAUTECH-1/M
NAUTECH-3/M

SilverSteer™

HORSEPOWER	KIT	HELM	CYLINDER (1)	FLEX HOSES (2)	OIL litres	WHEEL TURNS	OPTIONAL
> 300 hp (please refer to max power applicable)	SVS-28	UP28F-SVS	UC128-SVS	KIT OB-SVS	2	4,3	Steering wheel
	SVS-33	UP33F-SVS	UC128-SVS	KIT OB-SVS	2	3,6	Thru hull R8; R9

MasterDrive™

HORSEPOWER	KIT	HELM	POWER UNIT/ USER INTERFACE	OIL litres	WHEEL TURNS	ORDERED SEPARATELY
> 300 hp (please refer to max power applicable)	MD32-F	UH32-F	UPMD/UCMD	4	3,75	- Outboard cylinder UC128-SVS (1) - Inboard cylinder (1) - X66 tilt mechanism - Flex hoses: KIT OB-SVS (2) and KIT OBMD (3)
	MD32-T	UH32-T	UPMD/UCMD	4	3,75	
	MD40-F	UH40-F	UPMD/UCMD	4	6	
	MD40-T	UH40-T	UPMD/UCMD	4	6	

NOTE:
1) Please refer to cylinder application chart
2) See available lengths on appropriate section
3) KIT OBMD: helm – power unit connection flex hoses – Available lengths on appropriate section.

SVS-28, SVS 33

MD

ULTRAFLEX HYDRAULIC STEERING SYSTEMS

All the components of Ultraflex hydraulic steering systems are made specifically for the marine environment, using materials and working process which offer long life and safety for the most extreme conditions.

HOW THE SYSTEM WORKS

A hydraulic steering system consists of a steering pump, a cylinder tied to the rudder or to the outboard or sterndrive engine and the connecting nylon or copper tubing.
Under normal operating conditions, a turn of the steering wheel will send the oil from the helm unit into one of the two connecting hydraulic lines.
The oil will be pumped into one of the chambers of the cylinder and either extend or retract the cylinder rod, depending on the steering wheel rotation.
The fluid going out from the other chamber of the cylinder is returned to the helm via the other hydraulic line.
There are two basic components in all the hydraulic steering systems: the helm unit and the cylinder, connected by nylon or copper tubing.The helm unit consists of both a hydraulic pump and a valve assembly.
The valve assembly prevents outgoing fluid from returning along the same line, isolates each steering station, locks the rudder and eliminates rudder "feedback" to the helm.
The cylinders are double acting and may be balanced or unbalanced (in which case the rod extends through only one end of the cylinder).

SUGGESTIONS AND WARNINGS WHEN SELECTING A HYDRAULIC STEERING SYSTEM

The strength required to drive a boat equipped with a hydraulic steering system is inversely proportional to the number of turns of the wheel lock-to-lock. The wheel turns are determinated by the ratio between the cylinder volume, pump displacement.
With the same type of cylinder installed on the engine, the less are the turns, the faster is the response but higher is the effort; more wheel turns, slower is the response and lower is the effort.

Other factors that can influence steering effort are:
- Vessel speed
- Rudder dimension, or engine power
- Propeller selection
- Hull type (displacement, planing, etc.)
- Sea conditions
- Oil viscosity

CROSS REFERENCE

The above Cross Reference chart has been drawn to facilitate a functional comparison among brands and should be used as general reference only.

For any further information please contact our Technical Service

HELM PUMPS	
ULTRAFLEX	TELEFLEX®
UP18	BayStar™ HH4311
UP20 F	BayStar™ HH4314
UP20 T	BayStar™ HH4315
UP25 F	Seastar™ 1.4 HH5269
UP25NV F	-
UP25 T	Seastar™ 1.4 HH6544
UP28 F	Seastar™ 1.7 HH5271
UP28 T	Seastar™ 1.7 HH6541
UP 28 R	Seastar™ 1.7 HH5261
UP33 F	Seastar™ 2.0 HH5273
UP33NV F	Seastar™ 2.0 HH5760
UP33 T	Seastar™ 2.0 HH6543
UP33 R	-
UP39 F	Seastar™ 2.4 HH5272
UP39 T	Seastar™ 2.4 HH6542
UP39 R	Seastar™ 2.4 HH5262
UP45 F	Seastar™ 3.0 HH5283
UP45 T	-
UP45 R	Seastar™ 3.0 HH5265
UP28 F-SVS	Seastar™ PRO - HH5779
UP28 T-SVS	Seastar™ PRO – HH6573
UP33 F-SVS	Seastar™ PRO - HH5770
UP33 T-SVS	Seastar™ PRO – HH6574
UP39 F-SVS	Seastar™ PRO - HH5772
UP39 T-SVS	Seastar™ PRO - HH6188

CYLINDERS	
ULTRAFLEX	TELEFLEX®
UC81-OBF	-
UC94-OBF	Baystar™ HC4645
UC128-OBF	Seastar™ HC5345
UC128-SVS	Seastar™ HC6345
UC68-OBS	-
UC132-OBS	Seastar™ HC5370/5328
UC69-I	Baystar™ HC4461-3
UC116-1	Seastar™ HC5312
UC168-I	Seastar™ HC5314
UC215-I	Seastar™ HC5319
UC293-I	-
UC378-I	-

SINGLE STATION / SINGLE CYLINDER:

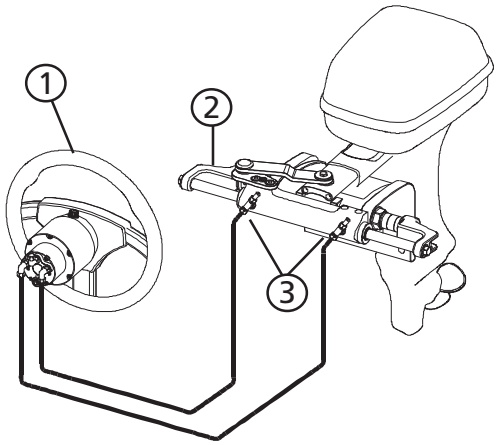

1. helm
2. starboard cylinder
3. bleed valves

SINGLE STATION / DUAL CYLINDER:

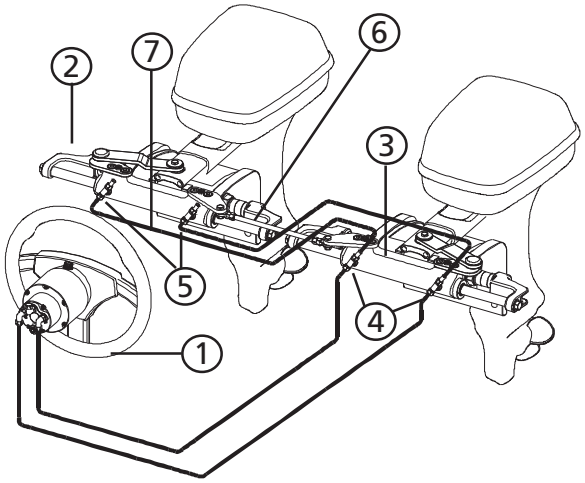

1. helm
2. starboard cylinder
3. port cylinder
4. "T" fittings
5. bleed valves
6. tie bar
7. kit OB-2C (Kit OB-2C-SVS for SilverSteer™)

DUAL STATION / SINGLE CYLINDER

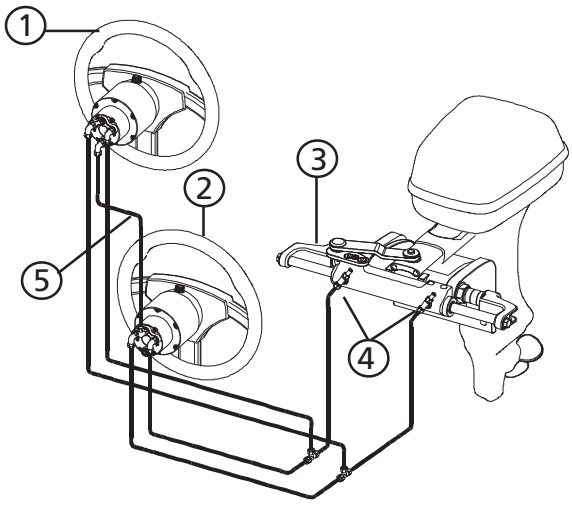

1. upper station helm
2. lower station helm
3. starboard cylinder
4. bleed valves
5. kit OB-2S

DUAL STATION / DUAL CYLINDER

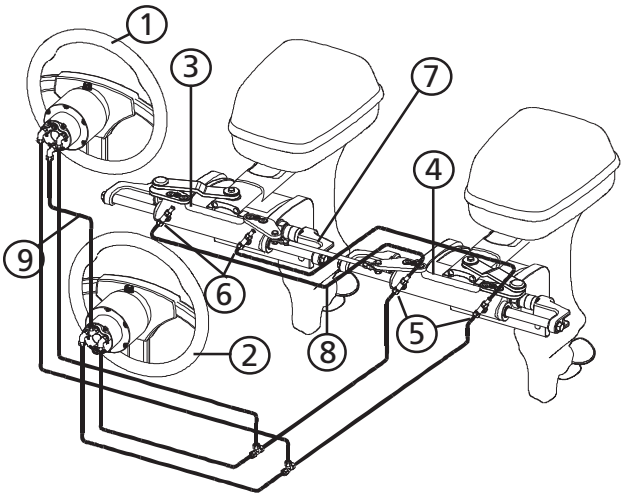

1. upper station helm
2. lower station helm
3. starboard cylinder
4. port cylinder
5. "T" fittings
6. bleed valves
7. tie bar
8. kit OB-2C (Kit OB-2C-SVS for SilverSteer™)
9. kit OB-2S

SUGGESTION AND WARNINGS WHEN SELECTING AN OUTBOARD HYDRAULIC STEERING SYSTEM

OUTBOARD CYLINDERS Maximum power rating applicable					
Cylinder model	Single engine single cylinder	Double engine single cylinder		Double engine double cylinder	
		NON counter rotating propellers	Counter rotating propellers	NON counter rotating propellers	Counter rotating propellers
	Max hp power	Max hp power	Max hp power	Max hp power	Max hp power
UC81-OBF	115	not applicable	not applicable	not applicable	not applicable
UC94-OBF	150	not applicable	not applicable	not applicable	not applicable
UC68-OBS	150	not applicable	not applicable	not applicable	not applicable
UC128-OBF	300	300	500	500	600
UC128-SVS	350	350	600	600	700
UC132-OBS	300	300	450	500	600

WARNING: These recommendations should be used as a general reference only. Final selection should be made with the assistance of a qualified installation technician. For any further information please contact our Technical Service

STEERING WHEEL TURNS single cylinder										
	UP18 18cc	UP20 20cc	UP25 25cc	UP28 28cc	UP33 33cc	UP 39 39cc	UP45 45 cc	UP28-SVS 28cc	UP33-SVS 33cc	UP39-SVS 39cc
UC81-OBF	4,5	-	-	-	-	-	-	-	-	-
UC94-OBF	-	4,7	-	-	-	-	-	-	-	-
UC128-OBF	-	-	4,8	4,3	3,6	3,1	-	-	-	-
UC128-SVS	-	-	-	-	-	-	-	4,3	3,6	3,1
UC68-OBS	-	3,4/5,0	-	-	-	-	-	-	-	-
UC132-OBS	-	-	5,3/6,5	4,7/5,8	4,0/4,9	3,4/4,2	2,9/3,6	-	-	-
UC133-IOB	-	-	5,6	4,7	4,0	3,4	2,9	-	-	-

Suggested

STEERING WHEEL TURNS double cylinder						
	UP28 28cc	UP33 33cc	UP39 39cc	UP45 45cc	UP33-SVS 33cc	UP39-SVS 39cc
UC128-OBF	-	7,3	6,2	5,3	-	-
UC128-SVS	-	-	-	-	7,3	6,2
UC132-OBS	-	8,0/9,8	6,8/8,4	5,8/7,2	-	-
UC133-IOB	-	8,0	6,8	5,8	-	-

Suggested

PACKAGED OUTBOARD STEERING SYSTEM FOR SINGLE ENGINE UP TO 115 HP

GOTECH-OBF WHEEL TURNS 4,5 - 42634 G

For outboard single engine up to 115 hp

GOTECH-OBF package kit contains:

UP18	Intermediate mount helm pump
UC81-OBF	Front mount outboard cylinder
OL 150	Hydraulic oil – 2 litres.
KIT OB-GT/M-60	Hose kit dia. 1/4" 6 m (19.7") length with fitting preassembled at one end only

The wheel is not included.

GOTECH-OBF - 42634 G

UP18 - HELM PUMP

- Built-in lock valve for positive rudder lock
- Integral relief valve for over-pressure protection
- 3/4" tapered anodized aluminum shaft
- Corrosion proof composite housing
- Easy accessibile lock valve and shaft seal for replacement
- For use with UC81-OBF cylinder only
- Intermediate dashboard position mount

UP18

MODEL	P. No.	MOUNTING	DISPLACEMENT/ REVOLUTION	No. OF PISTONS	RELIEF VALVE SETTING	MAXIMUM WHEEL DIA.	WEIGHT
UP18	**42629 P**	Intermediate	18 cc – 1.1 cu.in.	5	55 Bar - 800 PSI	508 mm - 20"	3.6 kg - 8 lbs

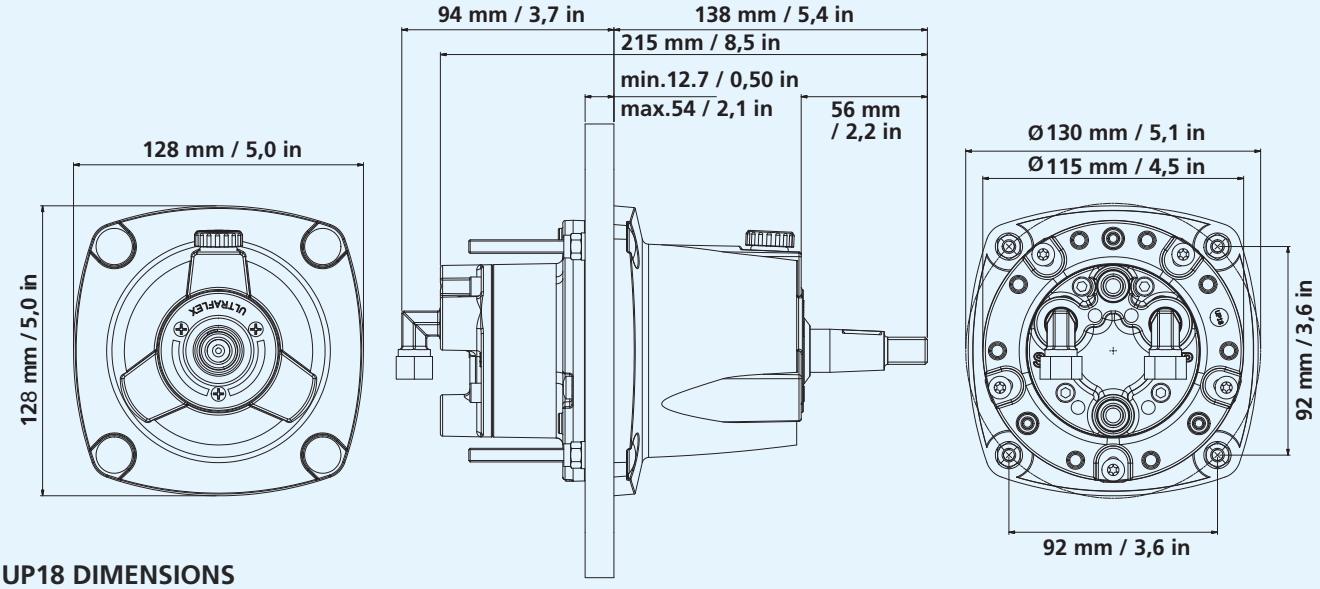

UP18 DIMENSIONS

UC81-OBF FRONT MOUNT CYLINDER

UC81-OBF - Balanced: the number of turns lock-to-lock is equal port to starboard and vice-versa.

Depending on the applications on the outboard engine, the UC81-OBF can be installed port or starboard

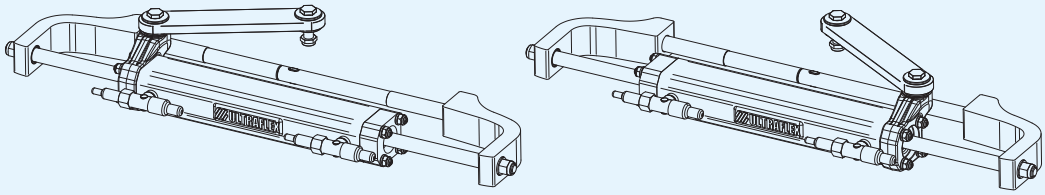

SPECIFICATIONS	**UC81-OBF** - 42654 N
Volume	81 cc - 4.9 cu. in
Output force	222 kg - 489 lbs
Inside diameter	27,4 mm - 1.08”
Stroke	186 mm - 7.3”
3/8” (9,5 mm) Fittings	For high pressure flex hose
Bleed fittings	DN5 Quick connect

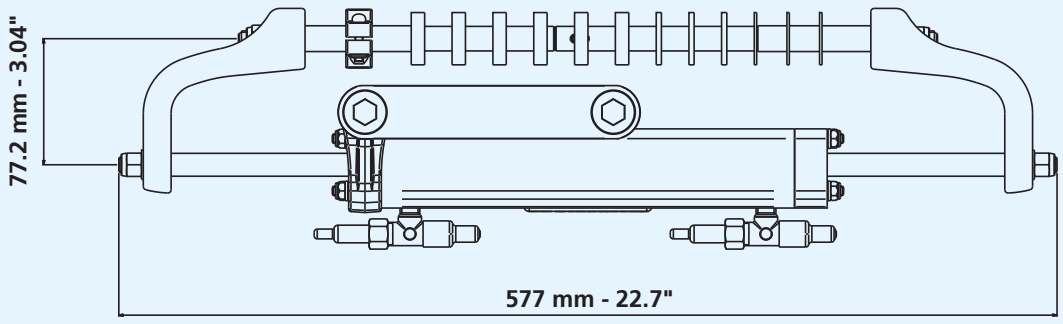

UC81-OBF DIMENSIONS

KIT OB-GT/M: HOSE KIT WITH PREASSEMBLED FITTINGS AT ONE END FOR SINGLE STATION APPLICATION

It consists of a pair of high pressure flexible hose dia. 1/4” with fittings, featuring turning nuts, preassembled at one end only and supplied with 2 non assembled fittings.
Recommended for use with GOTECH™ steering systems. Available on 6 m (19.7’) standard length that can be cut to fit the desired application.

KIT OB-GT/M	LENGTH	P. No
KIT OB-GT/M-60	6,00 m – 19.7 ft	42669 C

KIT OB-GT/M

UC81-OBF CYLINDER APPLICATIONS

Single engine up to 115 hp and where the boat speed does not exceed 45 mph (39 knots)

Not intended for use in racing applications

WARNING
These recommendations should be used as a general reference only. For any further information please contact our Technical Service.

ENGINE	POWER	YEAR
Mercury® Mariner®	50 – 75 – 90 2T 115 EFI 2T 75 – 90 – 115 Optimax 2T 40 – 50 – 60 EFI 4T 75 – 80 – 90 EFI 4T 100 – 115 EFI 4T	1990-2008 1990-2007 2004-today 2004-today 2000-today 2007-today
Evinrude®	E40-E50-E55-E60 2T E75-E90 2T E115 2T V4	2004-today 2004-today 1995-today
Yamaha®	60-70 2T 75C-90 2T 115C 2T F40G-F70 4T F30-F40-F60-F75-F80 EFI 4T F90-F100-F115 EFI 4T F80-F100 4T F115 F40D-F50F-F60C EFI 4T	1984-2008 1998-2008 1990-2008 2010-today 1999-2007 1999-2007 2000-today 2004-today
Honda®	BF40-50-60-75-90 4T BF115D BF115A BF90 V-TEC 4T	1995-today 1998-2009 2009-today 2008-today
Suzuki®	DF40-50-60-70-80-90 4T DF100-115 4T* DF100-115 4T new model	1998-today 1998-2008 2008-today
Tohatsu® Nissan®	40-50-60-70-90 2T 75-115 2T 40-50TLDI 4T 70-90-115 TLDI 4T	2004-today 2004-today 2004-today 2004-today
Selva®	40XS-50 Madeira 2T 40XS-50 Bull shark 2T 40XS-60 Grey shark 2T 40XS-70 Mako Shark 2T 40XS-60 St.Tropez 2T 80 Portofino/Tigershark 2T 25 Kingfish 4T 40 Aruana 4T 40XS-40XSR-50-60 Dorado EFI 4T 40XSR EFI Murena 4T 80XS-100-100XSR EFI Marlin 4T 115-115XSR EFI Tarpon 4T 115 EFI Narwhal 4T	 1995-today 2000-today
Johnson®	BJ60-70 4T BJ90-115 4T J90-115 V4 2T	2001-2007 2001-2007 1995-2007

***NOTE:**
Suzuki® engines built from 1998 to 2008 installing UC81-OBF cylinder require optional **KIT SU** - 41954W.

KIT FOR AUTOPILOT APPLICATION WITH GOTECH™

K18 - 42799S

K18

UP20 F - UP20 T
HELM PUMPS

FEATURES

- Built-in lock valve for positive rudder lock
- Integral relief valve for over-pressure protection
- 3/4" tapered anodized aluminum shaft
- Corrosion proof composite housing
- Easy accessible lock valve and shaft seal for replacement
- Includes 90° **adjustable** fittings for 3/8" tube
- For use with UC94-OBF, UC68-OBS and UC69-I cylinders only
- Tilt mechanism **X52** - 39250 U for UP20 T pump
  Tilt range of 48° and five locking positions

  NOTE: X52 tilt mechanism fits standard Ultraflex tilt mount rotary and rack and pinion steering helms as well as standard Ultraflex tilt mount hydraulic pumps except SilverSteer™ and MasterDrive™ steering systems
- **X64** - 40198 C square flange permits to install the UP20F pump in an intermediate dashboard position

UP20 F

UP20 T + X52

UP20 F + X64

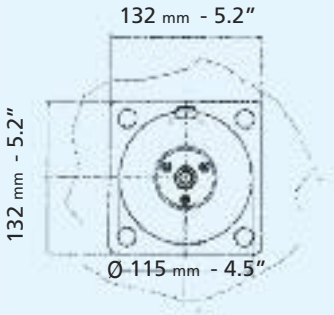

X64

MODEL	P. No.	MOUNTING	DISPLACEMENT/ REVOLUTION	No. OF PISTONS	RELIEF VALVE SETTING	MAXIMUM WHEEL DIA.	WEIGHT
UP20 F	**42468 S**	Front mount	20 cc - 1.2 cu. in	5	70 Bar - 1000 PSI	508 mm - 20"	3,6 kg - 8 lbs
UP20 T	**42469 U**	With X52 tilt	20 cc - 1.2 cu. in	5	70 Bar - 1000 PSI	406 mm - 16"	3,9 kg - 8.5 lbs

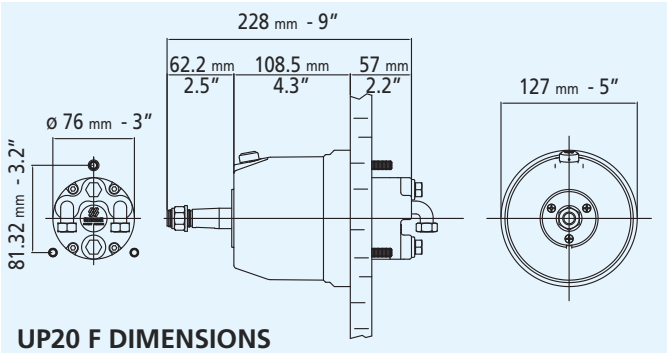

UP20 F DIMENSIONS

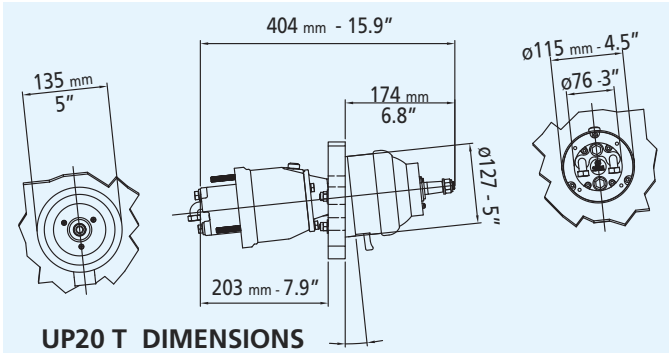

UP20 T DIMENSIONS

UP25 F - UP25NV F
UP28 F - UP33 F - UP33NV F
UP39 F - UP45 F
FRONT MOUNT HELM PUMPS

FEATURES

- Available in five different displacement sizes
- UP25F and UP33 F models are also available without built-in lock valve (**UP25NV F** and **UP33NV F** models)
- Compact design
- Ball bearing piston race
- Built-in lock valve for positive rudder lock (except UP25 NV F and UP33NV F)
- Integral relief valve for over-pressure protection
- 3/4" tapered stainless steel shaft
- Easily accessible lock valve and shaft seal for replacement
- Cast iron rotor for greater durability and longer life
- Includes 90° **adjustable** fittings for 3/8" tube
- **UP45 F** pump is ideal for double cylinder applications
- **X64** - 40198 C square flange or **X57** - 39464 P round flange permit to install the pumps in an intermediate dashboard position.

UP25 F/28 F/33 F/39 F/45 F + X64

UP25 F/28 F/33 F/39 F/45 F + X57

MODEL	P. No.	MOUNTING	DISPLACEMENT/ REVOLUTION	No. OF PISTONS	RELIEF VALVE SETTING	MAXIMUM WHEEL DIA.	WEIGHT
UP25 F	**42462 D**	Front mount	25 cc - 1.5 cu.in	5	70 Bar - 1000 PSI	710 mm - 28"	5 kg - 11 lbs
UP25NV F	**42473 J**	Front mount	25 cc - 1.5 cu.in	5	70 Bar - 1000 PSI	710 mm - 28"	5 kg - 11 lbs
UP28 F	**42459 R**	Front mount	28 cc - 1.7 cu.in	5	70 Bar - 1000 PSI	710 mm - 28"	5 kg - 11 lbs
UP33 F	**42456 J**	Front mount	33 cc - 2.0 cu.in	7	70 Bar - 1000 PSI	710 mm - 28"	5 kg - 11 lbs
UP33NV F	**42472 G**	Front mount	33 cc - 2.0 cu.in	7	70 Bar - 1000 PSI	710 mm - 28"	5 kg - 11 lbs
UP39 F	**42453 C**	Front mount	39 cc - 2.4 cu.in	7	70 Bar - 1000 PSI	710 mm - 28"	5 kg - 11 lbs
UP45 F	**42465 K**	Front mount	45 cc - 2.7 cu.in	7	70 Bar - 1000 PSI	710 mm - 28"	5 kg - 11 lbs

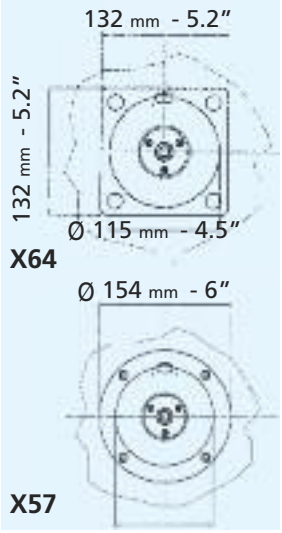

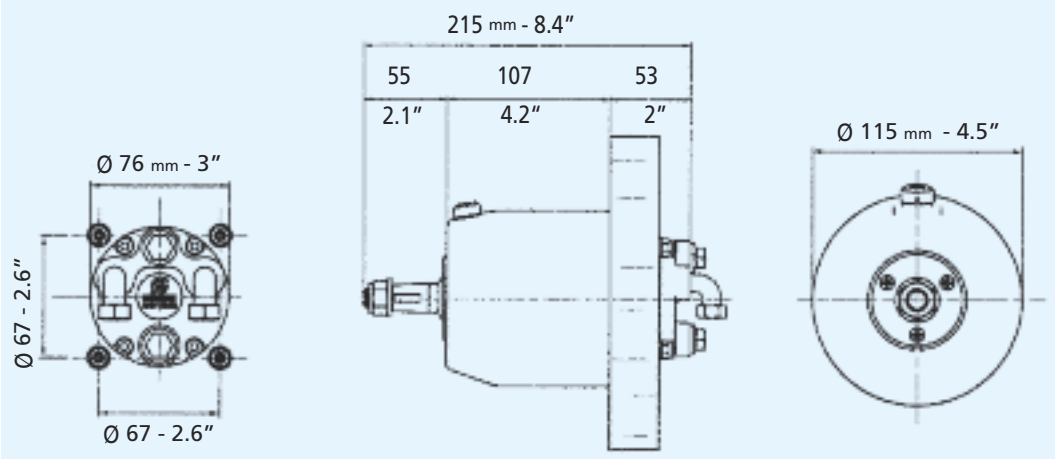

UP25 F, UP25NV F, UP28 F, UP33 F, UP33NV F, UP39 F, UP45 F DIMENSIONS

UP25 T - UP28 T - UP33 T
UP39 T - UP45 T
TILT MOUNT HELM PUMPS

FEATURES

- Available in five different displacement sizes
- Compact design
- Ball bearing piston race
- Built-in lock valve for positive rudder lock
- Integral relief valve for over-pressure protection
- Stainless steel shaft
- Easily accessible lock valve and shaft seal for replacement
- Cast iron rotor for greater durability and longer life
- Includes 90° **adjustable** fittings for 3/8" tube
- **UP45 T** pump is ideal for dual cylinder, dual outboard engine applications
- Tilt mechanism:
  X52 - 39250 U
  Tilt range of 48° and five locking positions

  NOTE: X52 tilt mechanism fits standard Ultraflex tilt mount rotary and rack and pinion steering helms as well as standard Ultraflex tilt mount hydraulic pumps except SilverSteer™ and MasterDrive™ steering systems

- **KIT F** (optional) - 39664 Y Remote fill adapter

MODEL	P. No.	MOUNTING	DISPLACEMENT/ REVOLUTION	No. OF PISTONS	RELIEF VALVE SETTING	MAXIMUM WHEEL DIA.	WEIGHT
UP25 T	**42464 H**	With X52 tilt	25 cc - 1.5 cu.in	5	70 Bar - 1000 PSI	406 mm - 16"	5 kg - 11 lbs
UP28 T	**42461 B**	With X52 tilt	28 cc - 1.7 cu.in	5	70 Bar - 1000 PSI	406 mm - 16"	5 kg - 11 lbs
UP33 T	**42458 N**	With X52 tilt	33 cc - 2.0 cu.in	7	70 Bar - 1000 PSI	406 mm - 16"	5 kg - 11 lbs
UP39 T	**42455 G**	With X52 tilt	39 cc - 2.4 cu.in	7	70 Bar - 1000 PSI	406 mm - 16"	5 kg - 11 lbs
UP45 T	**42467 P**	With X52 tilt	45 cc - 2.7 cu.in	7	70 Bar - 1000 PSI	406 mm - 16"	5 kg - 11 lbs

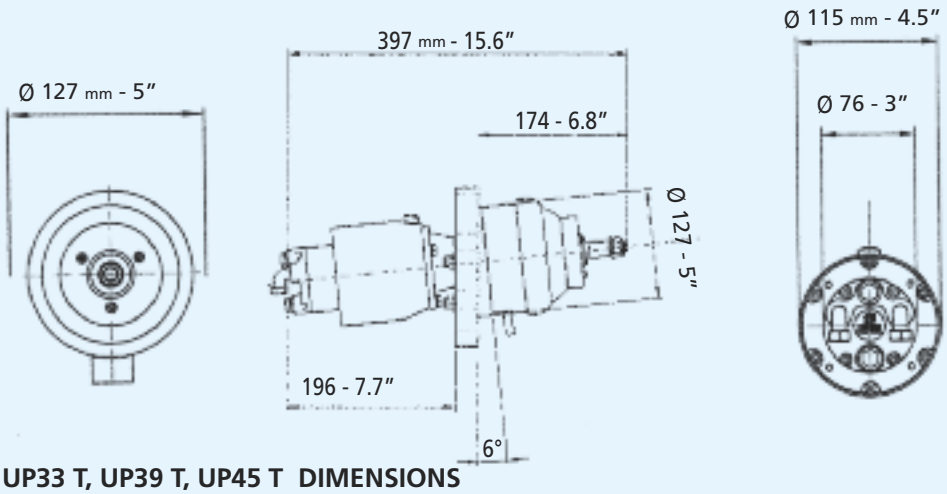

UP25 T, UP28 T, UP33 T, UP39 T, UP45 T DIMENSIONS

UP28 R - UP33 R
UP39 R - UP45 R
REAR MOUNT
HELM PUMPS

FEATURES

- Available in four different displacement sizes
- Compact design
- Ball bearing piston race
- Built-in lock valve for positive rudder lock
- Integral relief valve for over-pressure protection
- 3/4" tapered stainless steel shaft
- Easily accessible lock valve and shaft seal for replacement
- Cast iron cylinder rotor for greater durability and longer life
- White bezel included
- Complete with 90° **adjustable** fittings for 3/8" tube except UP45-I R pump (1/4" NPT straight fitting for 12 mm hose)
- **UP45 R** pump is ideal for double cylinder outboard applications
- **UP45** and **UP39** pumps are available also for inboard applications
- **X68** (optional) - 40894 Z Chrome bezel
- **KIT F** (optional) - 39664 Y Remote fill adapter

KIT F

X68

MODEL	P. No.	MOUNTING	DISPLACEMENT/ REVOLUTION	No. OF PISTONS	RELIEF VALVE SETTING	MAXIMUM WHEEL DIA.	WEIGHT
UP28 R	42460 Z	Rear mount	28 cc - 1.7 cu.in	5	70 Bar - 1000 PSI	710 mm - 28"	5 kg - 11 lbs
UP33 R	42457 L	Rear mount	33 cc - 2.0 cu.in	7	70 Bar - 1000 PSI	710 mm - 28"	5 kg - 11 lbs
UP39 R	42454 E	Rear mount	39 cc - 2.4 cu.in	7	70 Bar - 1000 PSI	710 mm - 28"	5 kg - 11 lbs
UP45 R	42466 M	Rear mount	45 cc - 2.7 cu.in	7	70 Bar - 1000 PSI	710 mm - 28"	5 kg - 11 lbs

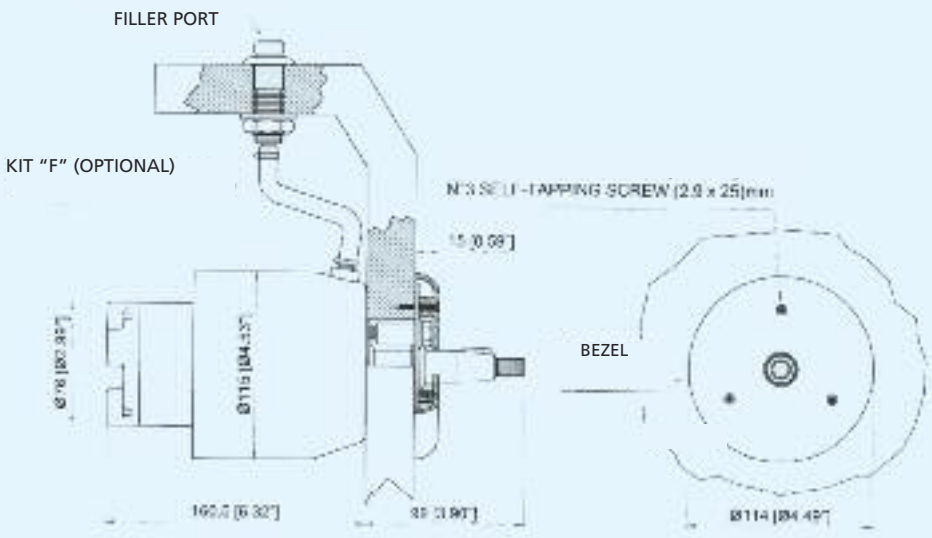

UP28 R, UP33 R, UP39 R, UP45 R DIMENSIONS

UC94-OBF FRONT MOUNT CYLINDER FOR OUTBOARD ENGINES UP TO 150 HP TOTAL

UC94-OBF - Balanced: the number of turns lock-to-lock is equal port to starboard or vice-versa

Adjustable boss style fittings for easy installation
High resistance stainless steel connection bolt (ULTRABOLT)

INNOVATIVE DESIGN (PATENTED):
Split and pinned cylinder mounting rod for easy installation and bushings to prevent friction with engine tilt tube.

Depending on the applications on the outboard engines, the UC94-OBF cylinder is available in 2 versions:

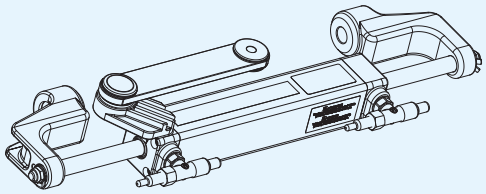

UC94-OBF/1 40154 F

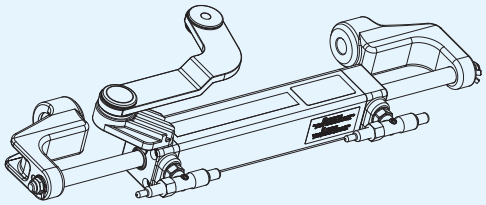

UC94-OBF/3 40161 C

SPECIFICATIONS	UC94-OBF/1 -/3
Volume	94 cc - 5.7 cu. in
Output force	278 kg - 613 lbs
Inside diameter	30 mm - 1.18”
Stroke	186 mm - 7.3”
3/8” (9.5mm) Fittings	For high pressure flex hose
Bleed fittings	DN5 Quick connect

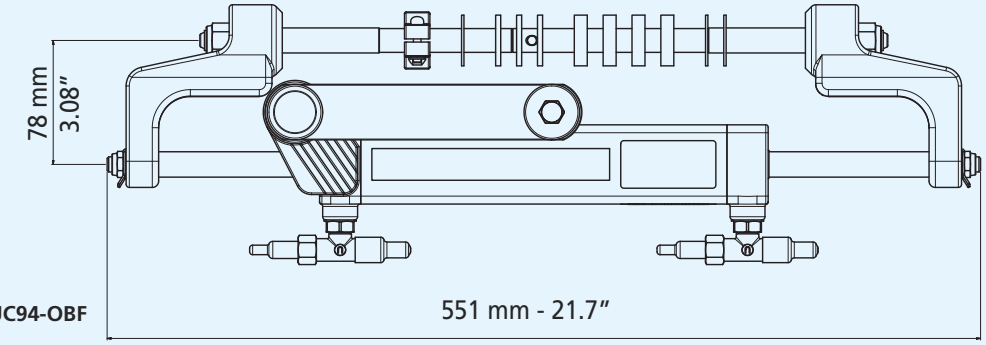

UC94-OBF

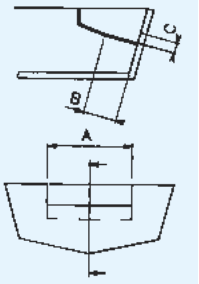

SPLASHWELL DIMENSION REQUIREMENTS			
Engine No.	A	B	C
1	540 mm - 21.25”	152 mm - 5.98”	152 mm - 5.98”
2	1110 mm - 43.70”	152 mm - 5.98”	152 mm - 5.98”

For twin engine applications, the minimum distance between the two engine centers is 21.6” (550 mm)

UC94-OBF CYLINDER APPLICATIONS

WARNING
The UC94-OBF front mount cylinder is recommended for use with outboard engines 150 hp total and less and where the boat speed does not exceed 55 mph (48 knots)

Not intended for use in racing applications

WARNING
These recommendations should be used as a general reference only. For any further information please contact our Technical Service.

ENGINE	POWER	YEAR	CYLINDER	P. No.
Mercury® Mariner®	50 – 75 – 90 2 Stroke	1990-2008	UC94-OBF/1	40154 F
	115 – 125 – 150 EFI 2 Stroke	1990-2007	UC94-OBF/1	40154 F
	75 – 90 – 115 - 125 Optimax 2 Stroke	2004-to date	UC94-OBF/3	40161 C
	135 – 150 Optimax 2 Stroke	1999-to date	UC94-OBF/1	40154 F
	40 – 50 – 60 EFI 4 Stroke	2004-to date	UC94-OBF/1	40154 F
	75 – 80 – 90 EFI 4 Stroke	2000-to date	UC94-OBF/1	40154 F
	100 – 115 EFI 4 Stroke	2007-to date	UC94-OBF/1	40154 F
	150 Fourstroke 4 Stroke	2011-to date	UC94-OBF/1	40154F
Evinrude®	E40-E50-E55-E60 2 Stroke	2004-to date	UC94-OBF/1	40154 F
	E75-E90 2 Stroke	2004-to date	UC94-OBF/1	40154 F
	E115-E130-E135 2 Stroke V4	1995-to date	UC94-OBF/1	40154 F
	E150 2 Stroke V6	1995-to date	UC94-OBF/1	40154 F
Yamaha®	60-70 2 Stroke	1984-2008	UC94-OBF/1	40154 F
	75C-90 2 Stroke	1998-2008	UC94-OBF/1	40154 F
	115C-130B 2 Stroke	1990-2008	UC94-OBF/1	40154 F
	150F	1996-2007	UC94-OBF/1	40154 F
	150 HPDI VMAX 2 Stroke	2000-2008	UC94-OBF/1	40154 F
	F60-F75-F80 EFI 4 Stroke	1999-2007	UC94-OBF/1	40154 F
	F90-F100-F115-F150 EFI 4 Stroke	1999-2007	UC94-OBF/1	40154 F
	F80-F100 4 Stroke	2000-to date	UC94-OBF/1	40154 F
	F115-F150	2004-to date	UC94-OBF/1	40154 F
Honda®	BF75-BF90 4 Stroke	1995-to date	UC94-OBF/1	40154 F
	BF115D	1998-2009	UC94-OBF/3	40161C
	BF115A	2009-to date	UC94-OBF/1	40154 F
	BF130A	1998-2005	UC94-OBF/3	40161C
	BF135-BF150 4 Stroke	2005-to date	UC94-OBF/1	40154 F
	BF90-BF150 V-TEC 4 Stroke	2008-to date	UC94-OBF/1	40154 F
Suzuki®	DF70-80-90 4 Stroke	1998-to date	UC94-OBF/1	40154 F
	DF100-115-140 4 Stroke*	1998-2008	UC94-OBF/1*	40154 F
	DF100-115-140 4 Stroke new model	2008-to date	UC94-OBF/1	40154 F
	DF150 4 Stroke	2006-to date	UC94-OBF/1	40154 F
Tohatsu® Nissan®	50-60-70-90 2 Stroke	2004-to date	UC94-OBF/1	40154 F
	115-120-140 2 Stroke	2004-to date	UC94-OBF/1	40154 F
	40-50TLDI 4 Stroke	2004-2011	UC94-OBF/1	40154 F
	70-90-115 TLDI 4 Stroke	2004-2011	UC94-OBF/1	40154 F
Selva®	50 Madeira/ Bull shark-60 Grey Shark/St.tropez- 70 Mako Shark 2 Stroke		UC94-OBF/1	40154 F
	80 Portofino/Tigershark 2 Stroke	1995-2008	UC94-OBF/1	40154 F
	150 White Shark 2 Stroke	2001-2007	UC94-OBF/1	40154 F
	50-60 Dorado efi 4 Stroke		UC94-OBF/1	40154 F
	100 EFI Marlin -115 EFI Narwhal-150EFI Killer Whale 4 Stroke	2000-to date	UC94-OBF/1	40154 F
Johnson®	BJ60-70 4 Stroke	2001-2007	UC94-OBF/1	40154 F
	BJ90-115-140 4 Stroke	2001-2007	UC94-OBF/1	40154 F
	J90-115 V4 2 Stroke	1995-2007	UC94-OBF/1	40154 F

***NOTE:**
Suzuki® engines built from 1998 to 2008 installing UC94-OBF/1 cylinder require optional **KIT SU** - 41954W.

UC94-OBF/1 on SUZUKI® 150 HP

UC94-OBF/1 on HONDA® 150 HP

UC128-OBF FRONT MOUNT CYLINDER

UC128-OBF - Balanced: the number of turns lock-to-lock is equal port to starboard or vice-versa

Adjustable boss style fittings for easy installation
High resistence stainless steel connection bolt (ULTRABOLT)

The UC128 cylinder is built to last with heavy duty stainless steel cylinder rod, seals and link assemblies. Constructed of top grade materials, this cylinder is simple to install and fits almost every 2 and 4 stroke outboard engine in the market. See the application guide next page to choose the appropriate cylinder (UC128-OBF/1, UC128-OBF/2 or UC128-OBF/3) for your application. The UC128 cylinders are recommended for use with UP25, UP28, UP33 and UP39 series helms and preassembled hoses (Kit OB and Kit OB/R5).
Depending on the applications on the outboard engines, the UC128-OBF is available in 3 versions:

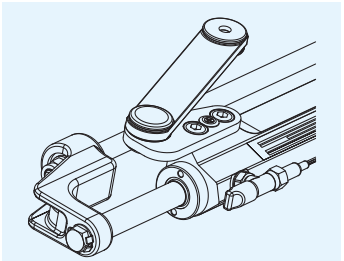

UC128-OBF/1 **39423 Z**

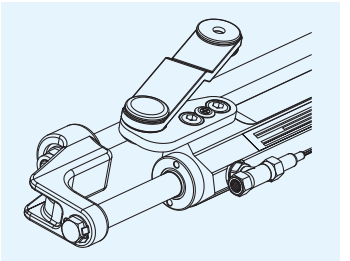

UC128-OBF/2 **39966 R**

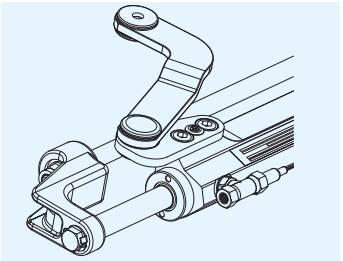

UC128-OBF/3 **39967 T**

In the applications with dual UC128-OBF cylinder it is necessary to order a standard UC128-OBF cylinder (link arm attached to the starboard side of the cylinder) and a port UC128P-OBF cylinder (link arm attached to the port side of the cylinder). See appropriate section for A90 tie bar, required for dual engine/dual cylinder applications.
Depending on the applications on the outboard engines, the UC128P-OBF port cylinder is available in 2 versions:

UC128P-OBF

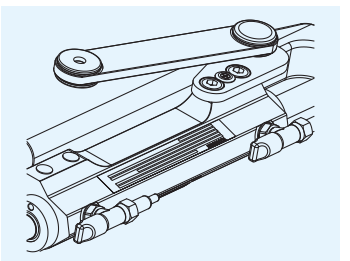

UC128P-OBF/1 **40106 U**

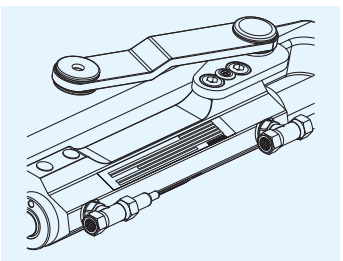

UC128P-OBF/2 **40107 W**

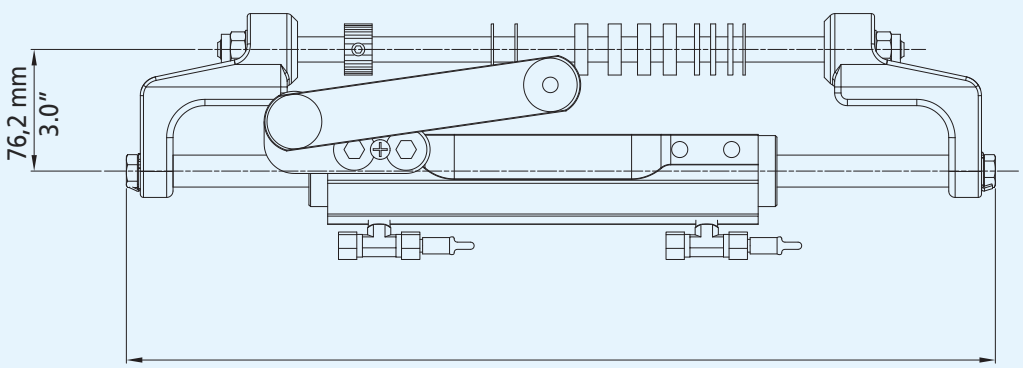

UC128-OBF DIMENSIONS 544 mm - 21.43"

SPECIFICATIONS	UC128-OBF/1 -/2 -/3
Volume	120 cc - 7.3 cu. in
Output force	450 kg - 992 lbs
Inside diameter	35 mm - 1.37”
Stroke	185 mm - 7.28”
3/8” (9.5mm) Fittings	For high pressure flex hose
Bleed fittings	DN5 Quick connect

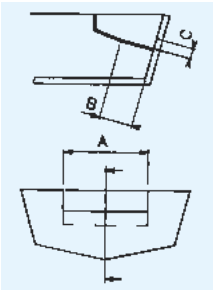

SPLASHWELL DIMENSION REQUIREMENTS			
Engine No.	A	B	C
1	560 mm - 22.05”	152 mm - 5.98”	152 mm - 5.98”
2	1110 mm - 43.70”	152 mm - 5.98”	152 mm - 5.98”

For twin engine applications minimum engine center distance is 550 mm (21.6”)

LA1, LA2, LA3 link arm kits for UC128-OBF standard cylinder and LA1P, LA2P link arm kits for UC128P-OBF port cylinder can also be supplied separately for the first application only, in case the UC128-OBF cylinder needs to be adapted to the already installed outboard engine (see application guide).

“STANDARD” LINK ARMS:

LA1 **40045 A**
for UC128-OBF/1

LA2 **40046 C**
for UC128-OBF/2

LA3 **40073 F**
for UC128-OBF/3

“PORT” LINK ARMS:

LA1P **40104 P**
for UC128P-OBF/1

LA2P **40105 S**
for UC128P-OBF/2

WARNING: LA1, LA2, LA3 and LA1P, LA2P link arm kits are recommended for use on the first installation **only** and **not** as a retrofit. Installation has to be made by qualified technicians only.
The tightening load to be applied to the screws **(included)** of the link arm kit is recommended on the Installation Manual and the mounting instructions supplied with the products.

UC128-OBF CYLINDER APPLICATIONS

ENGINE	MODEL	YEAR	CILINDER	P. NO.
Mercury® Mariner®	75-90-115-125 Optimax 2 Stroke	2004-to date	UC128-OBF/3	39967 T
	135-150-175 Optimax 2 Stroke	1999-to date	UC128-OBF/1	39423 Z
	200-225-250 Optimax 2 Stroke	1999-to date	UC128-OBF/1	39423 Z
	RACING 300 Optimax 2 Stroke	1999-2011	UC128-OBF/1	39423 Z
	100-115 EFI 4 Stroke	2007-to date	UC128-OBF/1	39423 Z
	115-125-150 EFI 2 Stroke	1990-2007	UC128-OBF/1	39423 Z
	225-250 EFI 2 Stroke	2000-2007	UC128-OBF/1	39423 Z
	250 Saltwater EFI 4 Stroke	2007-2011	UC128-OBF/1	39423 Z
	135 Verado L4 4 Stroke	2004-2006	UC128-OBF/1	39423 Z
	150-175-200 Verado L4 4 Stroke	2004-to date	UC128-OBF/1	39423 Z
Evinrude®	E75-E90 2 Stroke	2004-to date	UC128-OBF/2	39966 R
	E115-E130-E135 2 Stroke V4	1995-to date	UC128-OBF/2	39966 R
	E150-E175-E200 2 Stroke V6	1995-to date	UC128-OBF/2	39966 R
	E200 HO- E225-E250 2 Stroke V6	1995-to date	UC128-OBF/2	39966 R
	E250 HO- E300 2 Stroke V6		UC128-OBF/2	39966 R
Yamaha®	75C-90 2 Stroke	1998-2008	UC128-OBF/2	39966 R
	115C-130B 2 Stroke	1990-2008	UC128-OBF/2	39966 R
	150F-200F-250G 2 Stroke	1996-2007	UC128-OBF/2	39966 R
	150 HPDI VMAX 2 Stroke	2000-2008	UC128-OBF/2	39966 R
	175-200-225-250-300 HPDI VMAX 2 Stroke	2000-2008	UC128-OBF/2	39966 R
	F70 4 Stroke	2010-to date	UC128P-OBF/1	40106U
	F90-F100-F115-F150 EFI 4 Stroke	1999-2007	UC128-OBF/1	39423 Z
	F200-F225-F250 4 Stroke	2002-2007	UC128-OBF/2	39966 R
	F115-F150	2004-to date	UC128-OBF/1	39423 Z
	F200-F225-F250-F300 4 Stroke	2006-to date	UC128-OBF/1	39423 Z
	F350 4 Stroke	2008-to date	see UC128-SVS	SilverSteer
Honda®	BF75-90 4 Stroke	1995-to date	UC128-OBF/1	39423 Z
	BF115D	1998-2009	UC128-OBF/3	39967 T
	BF115A	2009-to date	UC128-OBF/1	39423 Z
	BF130A	1998-2005	UC128-OBF/3	39967 T
	BF135-150 4 Stroke	2005-to date	UC128-OBF/1	39423 Z
	BF90-BF150 V-TEC 4 Stroke	2008-to date	UC128-OBF/1	39423 Z
	BF175-200-225-250 4 Stroke	2001-to date	UC128-OBF/1	39423 Z
Suzuki®	DF70-80-90 4 Stroke	1998-to date	UC128-OBF/2	39966 R
	DF100-115-140 4 Stroke*	1998-2008	UC128-OBF/1*	39423 Z
	DF100-115-140 4 Stroke new model	2008-to date	UC128-OBF/1	39423 Z
	DF150-175 4 Stroke	2006-to date	UC128-OBF/1	39423 Z
	DF200-DF225-DF250-DF300		UC128-OBF/2	39966 R
Tohatsu®	115-120-140 2 Stroke	2004-to date	UC128-OBF/2	39966 R
	70-90-115 TLDI 4 Stroke	2004-2011	UC128-OBF/1	39423 Z
Selva®	80 Portofino/Tigershark 2 Stroke	1995-to date	UC128-OBF/1	39423 Z
	150 White Shark 2 Stroke			
	100EFI Marlin -115 EFI Narwhal-	2001-2007	UC128-OBF/2	39966 R
	150EFI Killer Whale 4 Stroke	2000-to date	UC128-OBF/1	39423 Z
Johnson®	BJ90-115-140 4 Stroke	2001-2007	UC128-OBF/1	39423 Z
	J90-115 V4 2 Stroke	1995-2007	UC128-OBF/2	39966 R
	J150-175 V6 2 Stroke	1995-2007	UC128-OBF/2	39966 R
	J200-225 V6 4 Stroke	2004-2007	UC128-OBF/2	39966 R

***NOTE:**
Suzuki® engines built from 1998 to 2008 installing UC128-OBF/1 cylinder require optional **KIT SU** - 41954W.

For higher horsepower applications, high performance SilverSteer™ cylinder is recommended.

WARNING

These recommendations should be used as a general reference only. Final selection should be made with the assistance of a qualified installation technician.
For any further information please contact our Technical Service.

UC128-OBF CYLINDER

ORDER GUIDE:

SYSTEM	APPLICATION	WHEEL TURNS	COMPONENTS	MODEL	QTY
Single engine Single cylinder	Up to 300 hp max	4,8 (UP25) 4,3 (UP28)	Cylinder Helm pump Hose Kit Oil Steering wheel	UC128-OBF UP25 or UP28 KIT OB OL 150 (Wheel selection)	1 1 1 2 1
For a second station add: **1 UP25 or UP28 helm pump, 1 KIT OB-2S fitting kit, 1 KIT OB, 1 OL 150, 1 steering wheel**					
Dual engine Single cylinder 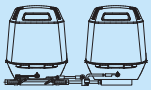	Up to 300 hp max (non-counter rotating engine) Up to 500 hp max (counter rotating engine)	4,8 (UP25) 4,3 (UP28)	Cylinder Helm pump Hose Kit Oil Tie bar Steering wheel	UC128-OBF UP25 or UP28 KIT OB OL 150 A94R (Wheel selection)	1 1 1 2 1 1
For a second station add: **1 UP25 or UP28 helm pump, 1 KIT OB-2S fitting kit, 1 KIT OB, 1 OL 150, 1 steering wheel**					
Dual engine Dual cylinder 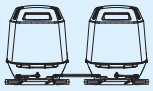	Up to 500 hp max (non-counter rotating engines) Up to 600 hp max (counter rotating engines)	6,1 (UP39) 5,3 (UP45)	Cylinder Cylinder Port Helm pump Hose Kit Oil Tie bar Steering wheel Connection Kit	UC128-OBF UC128P-OBF UP39 or UP45 KIT OB OL 150 A90 (Wheel selection) KIT OB-2C	1 1 1 1 3 1 1 1
For a second station add: **1 UP39 or UP45 helm pump, 1 KIT OB-2S fitting kit, 1 KIT OB, 2 T fittings 39502 V, 1 OL 150, 1 steering wheel**					

WARNING
The UC128-OBF front mount cylinder is not recommended for use in installations where the boat speed exceeds **57.5 mph (50 knots)** (69 mph (60 knots) in dual engine, dual cylinder and counter rotating engines application).
Not intended for use in racing applications.

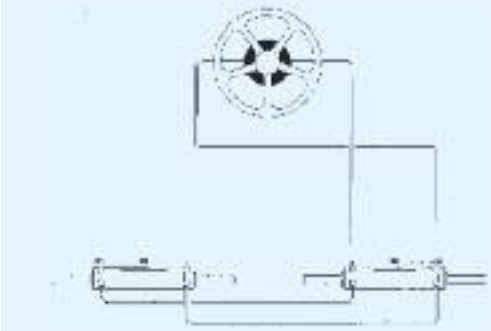

Dual engine dual cylinder application diagram

NOTE:
For high performance applications SilverSteer™ systems are recommended.

NOTE:
Three outboard engine applications are available with UC128-SVS cylinder. For any further and detailed information, please contact our Technical Service.

For triple outboard engine, dual cylinder applications, please refer to tie-bar section.

UC68-OBS SIDE MOUNT CYLINDER FOR OUTBOARD ENGINES UP TO 150 HP TOTAL

UC68-OBS - Unbalanced: the number of turns lock-to-lock is not equal port to starboard and vice-versa.

WARNING
Recommended for use where max boat speed do not exceed **46 mph (40 knots)**

SPECIFICATIONS	UC68-OBS - 39784 J
Volume	68/100 cc - 4.1/6.1 cu. in
Output force	185/270 kg - 408/595 lbs
Inside diameter	25 mm - 0.98"
Stroke	203 mm - 8"
3/8" (9.5mm) Fittings	For high pressure flex hose

UC68-OBS side mount cylinder features a turning nut for a fast and easy installation to the engine tube (PATENTED)

Clearance required at the engine tube side: 13.3" (340 mm)

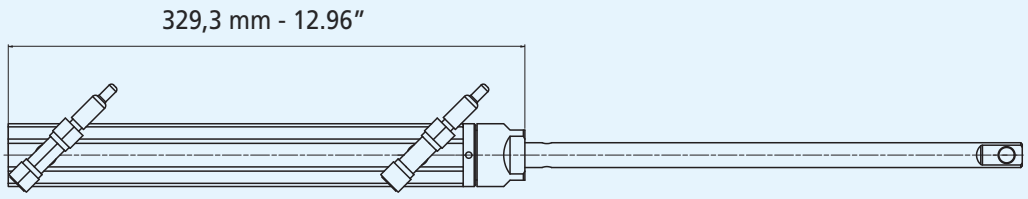

UC68-OBS

ORDER GUIDE:

SYSTEM	APPLICATION	WHEEL TURNS	COMPONENTS	MODEL	QTY
Single engine Single cylinder	Up to 150 hp max	3,4/5	Cylinder Helm pump Hose Kit Oil Steering wheel	UC68-OBS UP20 KIT OB OL 150 (Wheel selection)	1 1 1 2 1

UC68-OBS cylinder is also available in kit.

UC132-OBS SIDE MOUNT CYLINDER

UC132-OBS
Unbalanced: the number of turns lock-to-lock is not equal port to starboard and vice-versa

WARNING
UC132-OBS cylinder is not intended for use with 105 Bar (1500 psi) SilverSteer Series Helms

SPECIFICATIONS	**UC132-OBS** - 39430 W
Volume	132 / 163 cc - 8 / 9.95 cu. in
Output force	464 / 574 kg - 1023 / 1265 lbs
Inside diameter	32 mm - 1.25”
Stroke	203 mm - 8”
3/8” (9,5 mm) fittings	For high pressure flex hose

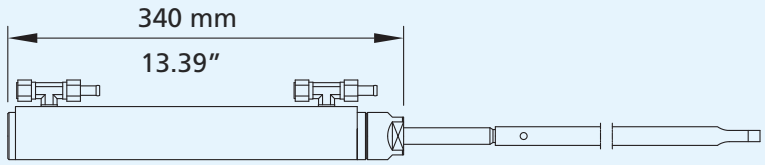

UC132-OBS DIMENSIONS

UC132-OBS side mount cylinder features a turning nut for a fast and easy installation to the engine tube (PATENTED)

Clearence required at the engine tube side: 375 mm (14.76”)

ORDER GUIDE:

WARNING
The UC132-OBS is not recommended for use in installations where the boat speed exceeds **51.5 mph (45 knots)** and the power exceeds max Coast Guard recommendation for the boat.

Not intended for use in racing applications.

SYSTEM	APPLICATION	WHEEL TURNS	COMPONENTS	MODEL	QTY
Single engine Single cylinder	Up to 300 hp max	5,3/6,5 (UP25) 4,7/5,8 (UP28)	Cylinder Helm pump Hose Kit Oil Steering wheel	UC132-OBS UP25 or UP28 KIT OB OL 150 (Wheel selection)	1 1 1 2 1
For a second station add: **1 UP25 or UP28 helm pump, 1 KIT OB-2S fitting kit, 1 KIT OB, 1 OL 150, 1 steering wheel**					
Dual engine Single cylinder	Up to 300 hp max (non-counter rotating engine) Up to 450 hp max (counter rotating engine)	5,3/6,5 (UP25) 4,7/5,8 (UP28)	Cylinder Helm pump Hose Kit Oil Tie bar Steering wheel	UC132-OBS UP25 or UP28 KIT OB OL 150 A88 or A92 (Wheel selection)	1 1 1 2 1 1
For a second station add: **1 UP25 or UP28 helm pump, 1 KIT OB-2S fitting kit, 1 KIT OB, 1 OL 150, 1 steering wheel**					
Dual engine Dual cylinder	Up to 500 hp max (non-counter rotating engines) Up to 600 hp max (counter rotating engines)	6,7/8,3 (UP39) 5,8/7,3 (UP45)	Cylinder Helm pump Hose Kit Oil Tie bar Steering wheel Connection Kit	UC132-OBS UP39 or UP45 KIT OB OL 150 A88 or A92 (Wheel selection) KIT OB-2C	2 1 1 3 1 1 1
For a second station add: **1 UP39 or UP45 helm pump, 1 KIT OB-2S fitting kit, 1 KIT OB, 2 T fittings 39502 V, 1 OL 150, 1 steering wheel** **WARNING: THIS APPLICATION REQUIRES THAT THE THREADS ON THE TILT TUBE EXTEND AT LEAST 15 mm (0.6”) FROM BOTH SIDES.**					

HIGH PRESSURE FLEXIBLE HOSES

KIT OB

KIT OB: HYDRAULIC HOSE KIT

Two high pressure flexible hoses with pre-crimped brass fittings and bend restrictors on both ends. Recommended for use with all Ultraflex standard helms with 70 Bar (1000 psi) relief valves. With SilverSteer™ and MasterDrive™ systems, use KIT OB-SVS.
Available lengths: from 3,00 m (9.8 ft) to 9,00 m (29.5 ft) with 0,5 m (1.6 ft) increments.

KIT OB/R5

KIT OB/R5: HYDRAULIC HOSE KIT

Two high pressure flexible hoses with pre-crimped brass fittings, R5 bulkhead fittings and bend restrictors on both ends. Recommended for use with all Ultraflex standard helms with 70 Bar (1000 psi) relief valves. With SilverSteer™ and MasterDrive™ systems, use KIT OB-SVS.
Available lengths: from 3,00 m (9.8 ft) to 9,00 m (29.5 ft) with 0,5 m (1.6 ft) increments.

KIT OB	LENGTH	P. No.
KIT OB-30	3,00 m - 9.8 ft	40852 G
KIT OB-35	3,50 m - 11.5 ft	40853 J
KIT OB-40	4,00 m - 13.2 ft	40752 C
KIT OB-45	4,50 m - 14.8 ft	40753 E
KIT OB-50	5,00 m - 16.4 ft	40754 G
KIT OB-55	5,50 m - 18.0 ft	40755 J
KIT OB-60	6,00 m - 19.7 ft	40749 P
KIT OB-65	6,50 m - 21.3 ft	40648 H
KIT OB-70	7,00 m - 22.9 ft	40796 Z
KIT OB-75	7,50 m - 24.6 ft	40854 L
KIT OB-80	8,00 m - 26.3 ft	40855 N
KIT OB-85	8,50 m - 27.8 ft	40856 R
KIT OB-90	9,00 m - 29.5 ft	40857 T

KIT OB/R5	LENGTH	P. No.
KIT OB/R5-30	3,00 m - 9.8 ft	40835 G
KIT OB/R5-35	3,50 m - 11.5 ft	40836 J
KIT OB/R5-40	4,00 m - 13.2 ft	40837 L
KIT OB/R5-45	4,50 m - 14.8 ft	40838 N
KIT OB/R5-50	5,00 m - 16.4 ft	40839 R
KIT OB/R5-55	5,50 m - 18.0 ft	40840 Z
KIT OB/R5-60	6,00 m - 19.7 ft	40841 B
KIT OB/R5-65	6,50 m - 21.3 ft	40842 D
KIT OB/R5-70	7,00 m - 22.9 ft	40843 F
KIT OB/R5-75	7,50 m - 24.6 ft	40844 H
KIT OB/R5-80	8,00 m - 26.3 ft	40845 K
KIT OB/R5-85	8,50 m - 27.8 ft	40846 M
KIT OB/R5-90	9,00 m - 29.5 ft	40847 P

KIT OB/M: HOSE KIT WITH PREASSEMBLED FITTINGS AT ONE END SINGLE STATION APPLICATION

It consists of a pair of high pressure flexible hose with fittings featuring turning nuts preassembled at one end only. It is supplied with 2 non assembled fittings and 2 reinforcing sleeves. Not recommended for use with SilverSteer™ and MasterDrive™ helms (1500 psi). Available on three lengths that can be cut to fit the desired application.

KIT OB/M

KIT OB/M	LENGTH	P. No.
KIT OB/M-60	6,00 m - 19.7 ft	41708 E
KIT OB/M-90	9,00 m - 29.5 ft	41709 G
KIT OB/M-150	15,00 m - 49.2 ft	42565 P

KIT OB-2C: DUAL CYLINDER/DUAL ENGINE CONNECTION KIT

Two high pressure flexible hoses with pre-crimped fittings and bend restrictors.
Not recommended for use with SilverSteer™ Series cylinders.
Three lengths available: 70 cm , 90 cm, 120 cm

KIT OB-2C

KIT OB-2C	LENGTH	P. No.
KIT OB-2C-07	0,7 m - 2.30 ft	41149 U
KIT OB-2C-09	0,9 m - 2.95 ft	40680 D
KIT OB-2C-12	1,20 m - 3.95 ft	40686 S

SILVERSTEER™

HIGH PERFORMANCE STEERING SYSTEMS
UP28 F-SVS – UP33 F-SVS – UP39 F-SVS
FRONT MOUNT HELM PUMPS

SilverSteer™ SVS helms have been specifically designed for high torque applications such as bass boats, flats boats, and boats with shallow dead rise and high horsepower.
Featuring a **1500 psi pressure valve**, the SilverSteer™ helms will deliver very precise steering at all torque loads.
The SVS helms are always to be installed in conjunction with the UC128-SVS cylinders and the Kit OB-SVS hoses, which are also specifically designed for high torque applications.
The front mount version is a direct drop-in replacement for competing helms. Both the front mount and tilt helms feature stainless steel shafts and 90° adjustable nickel-plated brass fittings.

FEATURES

- Available in three different displacement sizes
- Compact design
- Ball bearing piston race
- Built-in lock valve for positive rudder lock
- **Integral relief valve for over-pressure protection 105 bar (1500 psi)**
- 3/4" tapered stainless steel shaft
- Easily accessible lock valve and shaft seal for replacement
- Cast iron rotor for greater durability and longer life
- **Complete with 90° adjustable fittings for 3/8" tube**

MODEL	P. No.	MOUNTING	DISPLACEMENT/ REVOLUTION	No. OF PISTONS	RELIEF VALVE SETTING	MAXIMUM WHEEL DIA.	WEIGHT
UP28 F-SVS	**42662 M**	Front mount	28 cc - 1.7 cu.in	5	105 bar - 1500 PSi	710 mm - 28"	5 kg - 11 lbs
UP33 F-SVS	**42661 K**	Front mount	33 cc - 2.0 cu.in	7	105 bar - 1500 PSi	710 mm - 28"	5 kg - 11 lbs
UP39 F-SVS	**42660 H**	Front mount	39 cc - 2.4 cu.in	7	105 bar - 1500 PSi	710 mm - 28"	5 kg - 11 lbs

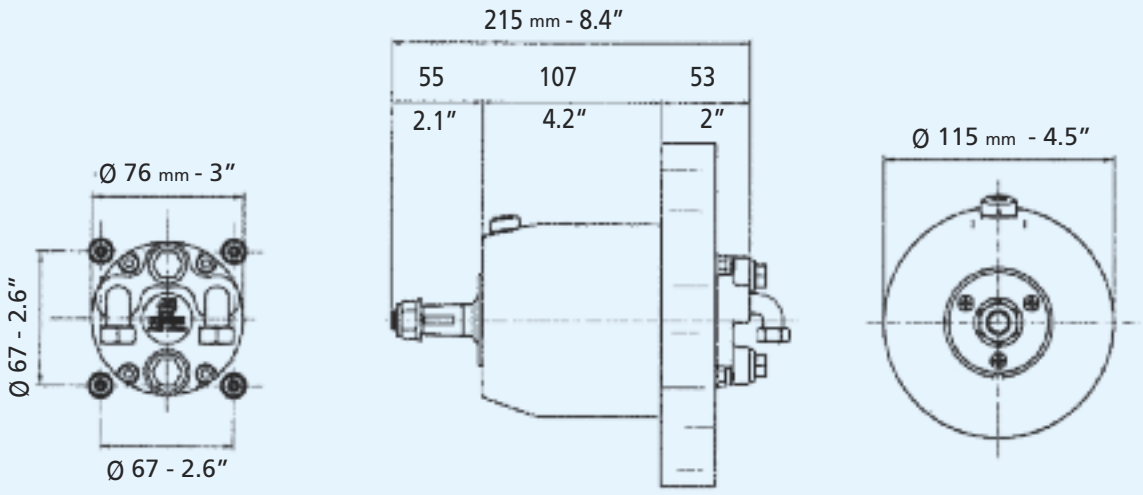

UP28 F-SVS, UP33 F-SVS and UP39 F-SVS DIMENSIONS

HIGH PERFORMANCE OUTBOARD STEERING SYSTEMS
UP28 T-SVS – UP33 T-SVS – UP39 T-SVS TILT MOUNT HELM PUMPS

FEATURES

- Available in three different displacement sizes
- Compact design
- Ball bearing piston race
- Built-in lock valve for positive rudder lock (patented)
- **Integral relief valve for over-pressure protection 105 bar (1500 psi)**
- Stainless steel shaft
- Easily accessible lock valve and shaft seal for replacement
- Cast iron rotor for greater durability and longer life
- Complete with 90° **adjustable** fittings for 3/8" tube
- Tilt mechanism for SilverSteer™ systems: **X70-SVS** – 41880 T
- Tilt range of 48° and five locking positions

WARNING: X52 standard tilt mechanism cannot be used on SilverSteer™ high performance helm pumps

- **KIT-F** (optional) – 39664 Y Remote fill adapter

X70-SVS

MODEL	P. No.	MOUNTING	DISPLACEMENT/ REVOLUTION	No. OF PISTONS	RELIEF VALVE SETTING	MAXIMUM WHEEL DIA.	WEIGHT
UP28 T-SVS	**42663 P**	with X70-SVS	28 cc - 1.7 cu.in	5	105 Bar - 1500 PSI	406 mm - 16"	5 kg - 11 lbs
UP33 T-SVS	**42664 S**	with X70-SVS	33 cc - 2.0 cu.in	7	105 Bar - 1500 PSI	406 mm - 16"	5 kg - 11 lbs
UP39 T-SVS	**42665 U**	with X70-SVS	39 cc - 2.4 cu.in	7	105 Bar - 1500 PSI	406 mm - 16"	5 kg - 11 lbs

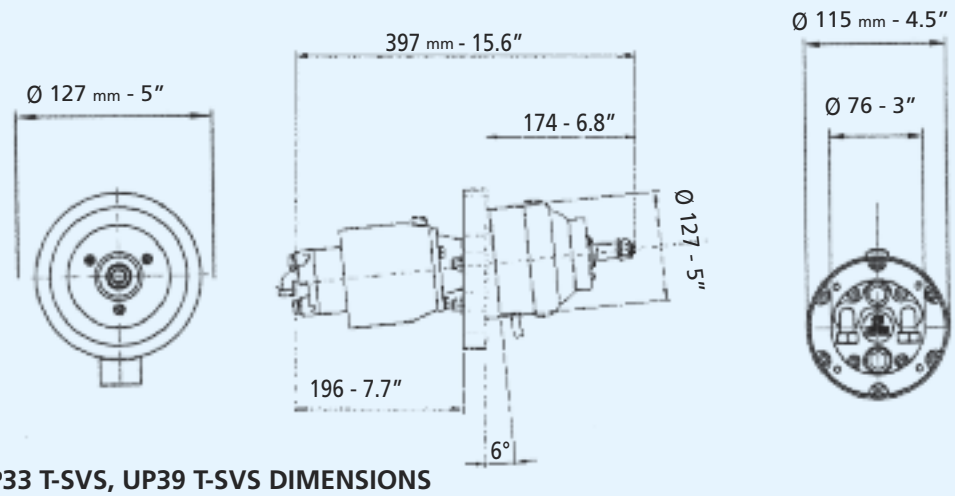

UP28 T-SVS, UP33 T-SVS, UP39 T-SVS DIMENSIONS

HIGH PERFORMANCE OUTBOARD STEERING SYSTEMS
UC128-SVS FRONT MOUNT CYLINDER

UC128-SVS – Balanced: the number of turns lock-to-lock is equal port to starboard or vice-versa

Adjustable boss style fittings for easy installation
High resistance stainless steel connection bolt (ULTRABOLT)

Specially designed for high performance, high torque applications the SilverSteer™ UC128-SVS cylinder is recommended for bass boats, flat boats and tournament fishing boats. The UC128-SVS is built to last with heavy duty stainless steel cylinder rod, seals and link assemblies. Constructed of top grade materials this cylinder is simple to install and fits almost every 2 and 4 stroke outboard engine in the market. See the application guide next page to choose the appropriate cylinder (UC128-SVS/1, UC128-SVS/2 or UC128-SVS/3) for your application.
Depending on the applications on the outboard engines, the UC128-SVS is available in 3 versions:

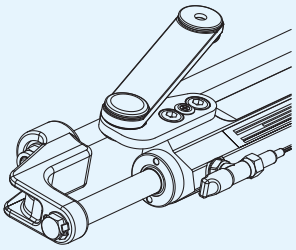

UC128/1-SVS **41281U**

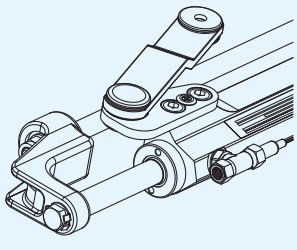

UC128/2-SVS **41282W**

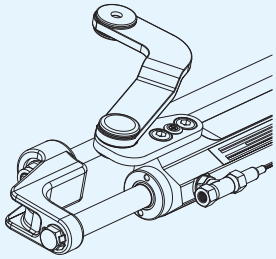

UC128/3-SVS **41283Y**

In the applications with dual UC128-SVS cylinder it is necessary to order a standard UC128-SVS cylinder (link arm attached to the starboard side of the cylinder) and a port UC128-SVS cylinder (link arm attached to the port side of the cylinder). See appropriate section for A90 tie bar required for use on dual engine/dual cylinder applications.
Depending on the applications on the outboard engines, the UC128P-SVS port cylinder is available in 2 versions:

UC128P-SVS

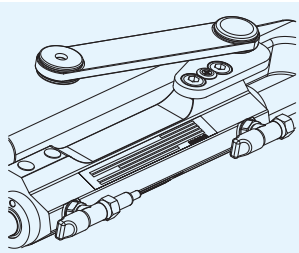

UC128P/1-SVS **41328U**

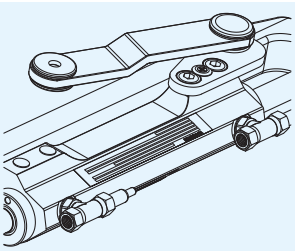

UC128P/2-SVS **41329W**

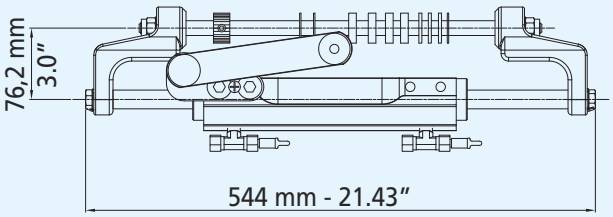

UC128-SVS, UC128P-SVS DIMENSIONS

SPECIFICATIONS	UC128/1 -/2 -/3 SVS
Volume	120 cc - 7.3 cu. in
Output force	450 kg - 992 lbs
Inside diameter	35 mm - 1.37"
Stroke	185 mm - 7.28"
3/8" (9.5mm) Fittings	For high pressure flex hose
Bleed fittings	DN5 Quick connect

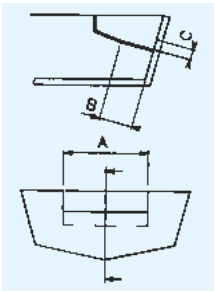

SPLASHWELL DIMENSION REQUIREMENTS			
Engine No.	**A**	**B**	**C**
1	560 mm - 22.05”	152 mm - 5.98”	152 mm - 5.98”
2	1110 mm - 43.70”	152 mm - 5.98”	152 mm - 5.98”

For twin engine applications minimum engine center distance is 550 mm (21.6”)

UC128-SVS CYLINDER APPLICATIONS

ENGINE	POWER	YEAR	CYLINDER	P. No.
Mercury® Mariner®	115-125-150 EFI 2 Stroke 225-250 EFI 2 Stroke 135-150-175 Optimax 200-225-250 Optimax RACING 300 Optimax 250 Saltwater EFI 4 Stroke 135 Verado L4 4 Stroke 150-175-200 Verado L4 4 Stroke	1990-2007 2000-2007 1999-to date 1999-to date 1999-2011 2007-2011 2004-2006 2004-to date	UC128/1-SVS UC128/1-SVS UC128/1-SVS UC128/1-SVS UC128/1-SVS UC128/1-SVS UC128/1-SVS UC128/1-SVS	41281 U 41281 U 41281 U 41281 U 41281 U 41281 U 41281 U 41281 U
Evinrude®	E115-E130-E135 2 Stroke V4 E150-E175-E200 2 Stroke V6 E200 HO- E225-E250 2 Stroke V6 E250HO- E300 2 Stroke V6	1995-to date 1995-to date 1995-to date	UC128/2-SVS UC128/2-SVS UC128/2-SVS UC128/2-SVS	41282 W 41282 W 41282 W 41282 W
Yamaha®	115C-130B 2 Stroke 150F-200F-250G 2 Stroke 150 HPDI VMAX 2 Stroke 175-200-225-250-300 HPDI VMAX 2 Stroke F115-F150 EFI 4 Stroke F200-F225-F250 4 Stroke F115-F150 F200-F225-F250-F300-F350 4 Stroke	1998-2008 1996-2007 2000-2008 2000-2008 1999-2007 2002-2007 2004-to date 2006-to date	UC128/2-SVS UC128/2-SVS UC128/2-SVS UC128/2-SVS UC128/1-SVS UC128/2-SVS UC128/1-SVS UC128/1-SVS	41282 W 41282 W 41282 W 41282 W 41281 U 41282 W 41281 U 41281 U
Honda®	BF115D BF115A BF130A BF135-150 4 Stroke BF150 V-TEC 4 Stroke BF175-BF200-BF225-BF250 4 Stroke	1998-2009 2009-to date 1998-2005 2005-to date 2008-to date 2001-to date	UC128/3-SVS UC128/1-SVS UC128/3-SVS UC128/1-SVS UC128/1-SVS UC128/1-SVS	41283 Y 41281 U 41283 Y 41281 U 41281 U 41281 U
Suzuki®	DF100-115-140 4 Stroke* DF100-115-140 4 Stroke DF150-175 4 Stroke DF200-DF225-DF250-DF300	1998-2008 2008-to date 2006-to date	UC128/1-SVS* UC128/1-SVS UC128/1-SVS UC128/2-SVS	41281 U 41281 U 41281 U 41282 W
Tohatsu®	115-120-140 2 Stroke 70-90-115 TLDI 4 Stroke	2004-to date 2004-to date	UC128/2-SVS UC128/1-SVS	41282 W 41281 U
Selva®	80 Portofino/Tigershark 2 Stroke 150 White Shark 2 Stroke 100EFI Marlin -115 EFI Narwhal- 150EFI Killer Whale 4 Stroke	1995-2008 2001-2007 2000-to date	UC128/2-SVS UC128/1-SVS UC128/2-SVS	41281 U 41282 W 41281 U
Johnson®	BJ90-115-140 4 Stroke J90-115 V4 2 Stroke J150-175 V6 2 Stroke J200-225 V6 4 Stroke	2001-2007 1995-2007 1995-2007 2004-2007	UC128/1-SVS UC128/2-SVS UC128/2-SVS UC128/2-SVS	41281 U 41282 W 41282 W 41282 W

***NOTE:**
Suzuki® engines built from 1998 to 2008 installing UC128/1-SVS cylinder require the kit **KIT SU** - 41954W ordered separately.

WARNING
These recommendations should be used as a general reference only. Final selection should be made with the assistance of a qualified installation technician.
For any further information please contact our Technical Service.

UC128-SVS CYLINDER

ORDER GUIDE:

SYSTEM	APPLICATION	WHEEL TURNS	COMPONENTS	MODEL	QTY
Single Engine Single Cylinder	Up to 350 hp max	4,3 (UP28) 3,6 (UP33)	Cylinder Helm pump Hose Kit Oil Steering wheel	UC128-SVS UP28 or UP33-SVS KIT OB-SVS OL 150 (Wheel selection)	1 1 1 2 1
For a second station add: 1 UP28-SVS or UP33-SVS helm pump, 1 KIT OB-2S fitting kit, 1 KIT OB-SVS, 1 OL 150, 1 steering wheel					
Dual engine Single cylinder 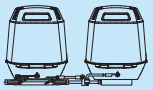	Up to 350 hp max (non-counter rotating engine) Up to 600 hp max (counter rotating engine)	4,3 (UP28) 3,6 (UP33)	Cylinder Helm pump Hose Kit Oil Tie bar Steering wheel	UC128-SVS UP28 or UP33-SVS KIT OB-SVS OL 150 A94R (Wheel selection)	1 1 1 2 1 1
For a second station add: 1 UP28-SVS or UP33-SVS helm pump, 1 KIT OB-2S fitting kit, 1 KIT OB-SVS, 1 l OL 150, 1 steering wheel					
Dual engine Dual cylinder 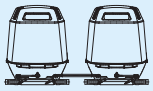	Up to 600 hp max (non-counter rotating engines) Up to 700 hp max (counter rotating engines)	6,1 (UP39)	Cylinder Cylinder Port Helm pump Hose Kit Oil Tie bar Steering wheel Connection Kit	UC128-SVS UC128P-SVS UP39-SVS KIT OB-SVS OL 150 A90 (Wheel selection) KIT OB-2C-SVS	1 1 1 1 3 1 1 1
For a second station add: 1 UP39-SVS helm pump, 1 KIT OB-2S fitting kit, 1 KIT OB-SVS, 2 T fittings 39502 V, 1 OL 150, 1 steering wheel					

WARNING
The UC128-SVS front mount cylinder is not recommended for use in installations where the boat speed exceeds **69 mph (60 knots)**; (75 mph (65 knots) in dual engine, dual cylinder and counter rotating engines application).
Not intended for use in racing applications.

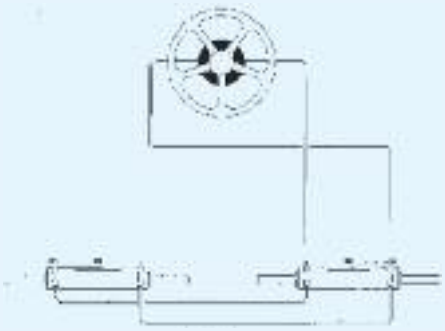

Dual engine dual cylinder application diagram

ATTENTION:
The SilverSteer™ helm pumps are always to be installed in conjunction with the UC128-SVS cylinder and the Kevlar reinforced hose kit KIT OB-SVS.

NOTE:
Three outboard engine applications are available with UC128-SVS cylinder. For any further and detailed information, please contact our Technical Service.

For triple outboard engine, dual cylinder applications, please refer to tie-bar section.

HIGH PERFORMANCE OUTBOARD STEERING SYSTEMS

KIT OB-SVS : HOSE KIT FOR SINGLE STATION INSTALLATION FOR SILVERSTEER™ SYSTEMS

Two high pressure Kevlar stranded flexible hoses with pre-crimped fittings and bend restrictors on both ends. Recommended for use with all Ultraflex SilverSteer™ and MasterDrive™ helms with 1500 psi relief valves.
Lenghts available: from 3m (9.8') to 9m (29.5') with 0,5m (1.6') increments.

KIT OB-SVS

KIT OB/R5-SVS : HOSE KIT FOR SINGLE STATION INSTALLATION FOR SILVERSTEER™ SYSTEMS

Two high pressure Kevlar stranded flexible hoses with pre-crimped fittings, R5 bulkhead fittings and bend restrictors on both ends. Recommended for use with all Ultraflex SilverSteer™ and MasterDrive™ helms with 1500 psi relief valves.
Available lengths: from 3,00 m (9.8 ft) to 9,00 m (29.5 ft) with 0,5 m (1.6 ft) increments.

KIT OB/R5-SVS

KIT OB-SVS	LENGTH	P. No.
KIT OB-SVS-30	3,00 m - 9.8 ft	41286 E
KIT OB-SVS-35	3,50 m - 11.5 ft	41287 G
KIT OB-SVS-40	4,00 m - 13.2 ft	41288 J
KIT OB-SVS-45	4,50 m - 14.8 ft	41289 L
KIT OB-SVS-50	5,00 m - 16.4 ft	41290 V
KIT OB-SVS-55	5,50 m - 18.0 ft	41291 X
KIT OB-SVS-60	6,00 m - 19.7 ft	41292 Z
KIT OB-SVS-65	6,50 m - 21.3 ft	41293 B
KIT OB-SVS-70	7,00 m - 22.9 ft	41294 D
KIT OB-SVS-75	7,50 m - 24.6 ft	41295 F
KIT OB-SVS-80	8,00 m - 26.3 ft	41296 H
KIT OB-SVS-85	8,50 m - 27.8 ft	41297 K
KIT OB-SVS-90	9,00 m - 29.5 ft	41298 M

KIT OB/R5-SVS	LENGTH	P. No.
KIT OB/R5-SVS-30	3,00 m - 9.8 ft	41312 C
KIT OB/R5-SVS-35	3,50 m - 11.5 ft	41313 E
KIT OB/R5-SVS-40	4,00 m - 13.2 ft	41314 G
KIT OB/R5-SVS-45	4,50 m - 14.8 ft	41315 J
KIT OB/R5-SVS-50	5,00 m - 16.4 ft	41316 L
KIT OB/R5-SVS-55	5,50 m - 18.0 ft	41317 N
KIT OB/R5-SVS-60	6,00 m - 19.7 ft	41318 R
KIT OB/R5-SVS-65	6,50 m - 21.3 ft	41319 T
KIT OB/R5-SVS-70	7,00 m - 22.9 ft	41320 B
KIT OB/R5-SVS-75	7,50 m - 24.6 ft	41321 D
KIT OB/R5-SVS-80	8,00 m - 26.3 ft	41322 F
KIT OB/R5-SVS-85	8,50 m - 27.8 ft	41323 H
KIT OB/R5-SVS-90	9,00 m - 29.5 ft	41324 K

WARNING: The SilverSteer™ helm pumps are always to be installed in conjunction with the UC128-SVS cylinder and the Kevlar reinforced hose kit KIT OB-SVS.

KIT OB-2C-SVS: DUAL CYLINDER/DUAL ENGINE CONNECTION KIT FOR SILVERSTEER™ SYSTEMS

Two high pressure Kevlar stranded flexible hoses with pre-crimped fittings and bend restrictors. Recommended for use with all SilverSteer™ Series cylinders.
Three lengths available: 70 cm (2.3'), 90 cm (2.95') and 120 cm (3.95').

KIT OB-2C-SVS	LENGTH	P. No.
KIT OB-2C-SVS-07	0,7 m - 2.30 ft	41705 Y
KIT OB-2C-SVS-09	0,9 m - 2.95 ft	41706 A
KIT OB-2C-SVS-12	1,20 m - 3.95 ft	41707 C

KIT OB-2C-SVS

MASTERDRIVE™

POWER ASSISTED OUTBOARD STEERING SYSTEM

Effortless steering for the most demanding applications!The MasterDrive™ power assisted outboard steering system delivers fingertip control regardless of speed or torque conditions.

MD

MasterDrive™ SYSTEM FEATURES

- Eliminates torque at the steering wheel
- Three different selectable levels of power give the boater the desired feeling on the wheel (PATENTED).
- Automatically reverts to manual mode in case of power loss.
- High efficiency, low Amp draw
- The system always running permits immediate control in any sea conditions
- Equipped with safety switch ON/OFF (SMART BUTTON)
- Can be used on dual station installations
- Suitable for use with autopilot
- Low noise
- Voltage: 12VDC
- CE marked in conformity with ABYC P21, ISO 10592 safety standards
- Ignition protected (SAE J-1171 and UNI EN 28846)

COMPONENTI

- 1 single packaged **KIT MD** for single station containing:
  - 1 **UH** Front or tilt mount Master Helm
  - 1 **UPMD** Power Unit, 15' (4,5 m) wiring harness included
  - 1 **UCMD** User Interface
  - 4 **OL 150** bottles of hydraulic oil
- 1 **KIT MD2** for dual station
- 1 **UC128-SVS** Silversteer™ Steering Cylinder (1 UC128-SVS starboard+1 UC128/P-SVS port on dual cylinder applications)
- 1 **KIT OBMD**: high pressure hose kit, helm-power unit connection, complete with preassembled fittings.
- 1 **KIT OB-SVS**: SilverSteer™ high pressure hose kit complete with preassembled fittings.
- 1 **KIT OB-2C-SVS**: SilverSteer™ high pressure hose kit complete with preassembled fittings for cylinder connection (dual cylinder applications only).
- 1 Tilt mechanism **X66** - 40613 M suitable for Tilt Mount Helm. Tilt range of 48° and five locking positions.
- 1 Dual cylinder application Tie Bar: see selection
- 1 Steering wheel: see selection
- 1 Instruction Manual

SINGLE CYLINDER SINGLE STATION APPLICATION

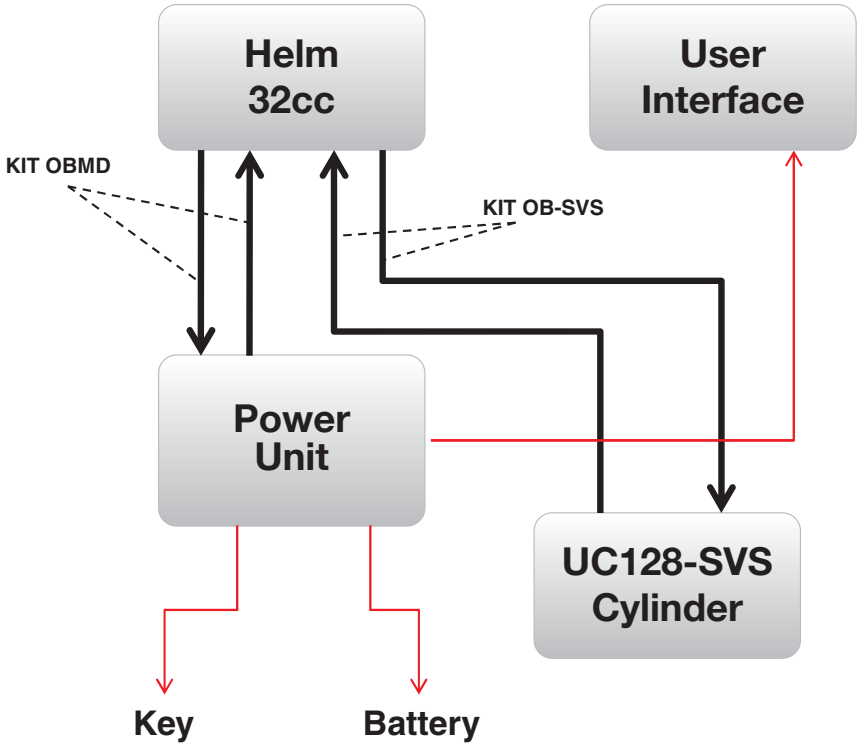

— wiring harness — high pressure hoses

DUAL CYLINDER SINGLE STATION APPLICATION

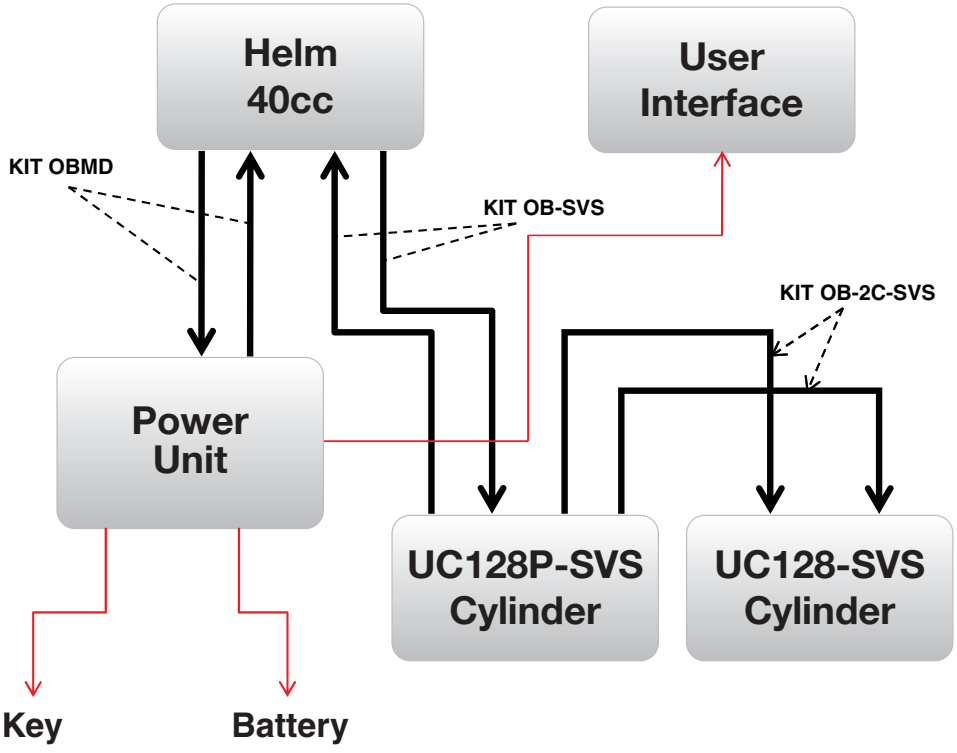

— wiring harness — high pressure hoses

UH - MASTER HELMS

- Available in two different displacement sizes: 32 cc (1.95 cu.in) and 40 cc (2.44 cu.in)
- Front Mount and Tilt Mount versions
- Dual station installation version also available (please refer to MD2 Kit)
- Built-in relief valve
- 3/4" tapered shaft
- Corrosion resistant painted body
- Waterproof
- Tilt Mount version is suitable for use with **X66**-40613 M tilt mechanism

UH

MODEL	P. No.	MOUNTING	DISPLACEMENT/ REVOLUTION	APPLICATION	No. OF STATIONS	MAXIMUM WHEEL DIA.
UH32-F	**42091 U**	front mount	32cc - 1.95 cu.in	single cylinder	1	406 mm - 16"
UH32-T	**42092 W**	with X66 tilt	32cc - 1.95 cu.in	single cylinder	1	406 mm - 16"
UH40-F	**42093 Y**	front mount	40cc - 2.44 cu.in	dual cylinder	1	406 mm - 16"
UH40-T	**42095 C**	with X66 tilt	40cc - 2.44 cu.in	dual cylinder	1	406 mm - 16"

UH32: wheel turns lock-to-lock in single cylinder applications: **3,75**
UH40: wheel turns lock-to-lock in dual cylinder applications: **6**

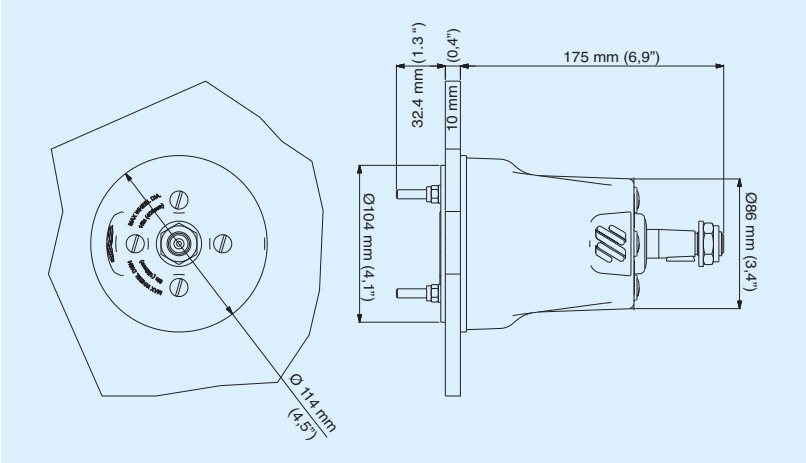

UH32-F and UH40-F DIMENSIONS

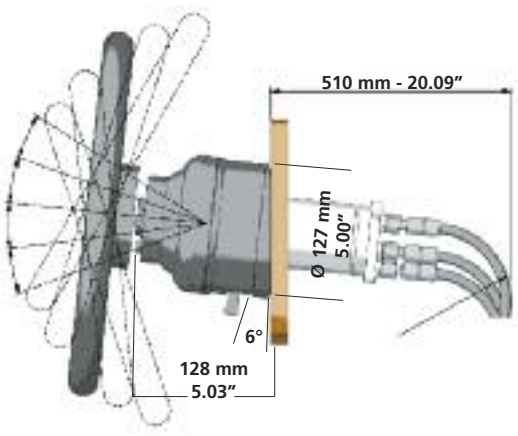

UH32-T and UH40-T DIMENSIONS

TILT MECHANISM

- **X66** - 40613 M
  Tilt mechanism for MasterDrive ™ tilt mount helms.
  Tilt range of 48° and five locking positions.

X66

MDF-90

90° TWO FITTING KIT FOR MASTERDRIVE HELMS (OPTIONAL)

- **MDF90** - 42821 F

INTERMEDIATE HELM POSITION INSTALLATION KIT (OPTIONAL)

- **K81** - 42435 A
  Kit to permit the MasterDrive™ helm installation at an intermediate dashboard position
- **K81MM** - 42498 B
  Suitable Version for Mercury® Verado™ power-assisted helm.

K81

K81MM

UPMD - POWER UNIT 42096 E

- 12VDC Motor
- 45° swiveling fittings for easy installation
- Semitransparent 0,5 litre (0.11gal) tank gives immediate oil level vision
- Vented filler plug
- Suitable for applications with autopilot
- Bulkhead or floor mount
- Black galvanized motor case, salt water resistant
- 4,5 m (15') Wiring Harness included
- IP67 waterproof
- Ignition protected (SAE J-1171 and UNI EN 28846)

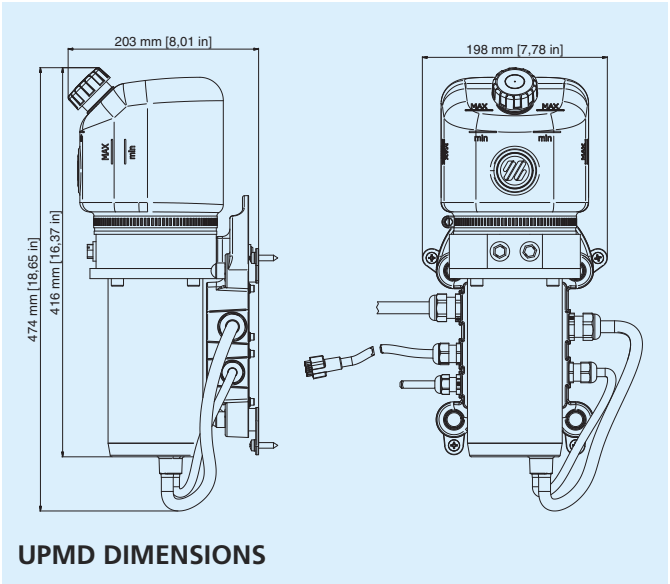

UPMD DIMENSIONS

UPMD

UCMD - USER INTERFACE 42097 G

- Safety switch ON/OFF(SMART BUTTON)
- Three different power levels with light indicator (PATENTED)
- Motor temperature visual indicator
- Twin engine key selection included
- Lighted panel for stand-by position
- Plug-in wiring harness
- Suitable for a second station installation
- 7 m (23 ft) panel extension cable also available – 42636 L

UCMD

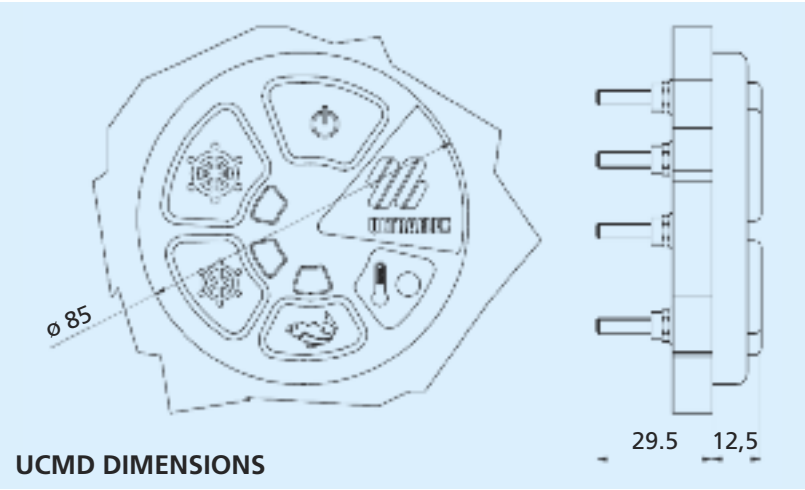

UCMD DIMENSIONS

MD - PACKAGED KIT FOR SINGLE STATION

MasterDrive ™ packaged kit contains:
- **UH** 1 Master Helm Pump
- **UPMD** 1 Power Unit, 15' (4,5 m) wiring harness included
- **UCMD** 1 User Interface
- **OL 150** 4 liters hydraulic oil
- Installation Manual

Depending on the helm type, 4 versions are available:
MD32-F 42098 J
32 cc Front Mount Helm included
MD32-T 42100 S
32 cc Tilt Mount Helm included
MD40-F 42102 W
40 cc Front Mount Helm included
MD40-T 42104 A
40 cc Tilt Mount Helm included

The SilverSteer™ UC128-SVS cylinder, the hydraulic hose kits, the **X66**-40613 M tilt mechanism, the tie bar and the wheel are to be ordered separately

7 m (23 ft) Panel extension cable also available - 42636 L

MD2 - PACKAGED KIT FOR DUAL STATION

Master Drive™ MD2 packaged kit for dual station contains:
- **UHD** 1 Slave helm pump
- **UCMD** 1 User interface
- **74162 W** - one 23 ft (7 m) electric cable for the second station comunications
- **OL 150** 1 liter of hydraulic oil
- **70957 S** - one 3/8" straight fitting
- **74162 W** - two 3/8" T fittings
- Installation Manual

Depending on the helm type, 4 versions are available:
MD2 32-F - 42610 S
32 cc Front Mount Helm included
MD2 32-T - 42611 U
32 cc Tilt Mount Helm included
MD2 40-F - 42520 R
40 cc Front Mount Helm included
MD2 40-T - 42612 W
40 cc Tilt Mount Helm included

MODEL	P. No.	MOUNTING	DISPLACEMENT/ REVOLUTION	APPLICATION	No. OF STATIONS	MAXIMUM WHEEL DIA.
UHD32-F	42615 C	front mount	32cc - 1.95 cu.in	Single cylinder	2	406 mm - 16"
UHD32-T	42616 E	with X66 tilt	32cc - 1.95 cu.in	Single cylinder	2	406 mm - 16"
UHD40-F	42094 A	front mount	40cc - 2.44 cu.in	Dual cylinder	2	406 mm - 16"
UHD40-T	42617 G	with X66 tilt	40cc - 2.44 cu.in	Dual cylinder	2	406 mm - 16"

To order separately:
n.1 Kit OBMD with length equal to the distance between the master helm pump and the slave helm pump
n.2 Kits OB-SVS: select the desired length

For dual cylinder applications, order:
n.1 KIT OB-2C-SVS: select the desired length.

The tilt mechanism **X66** – 40613 M and the wheel are to be ordered separately.

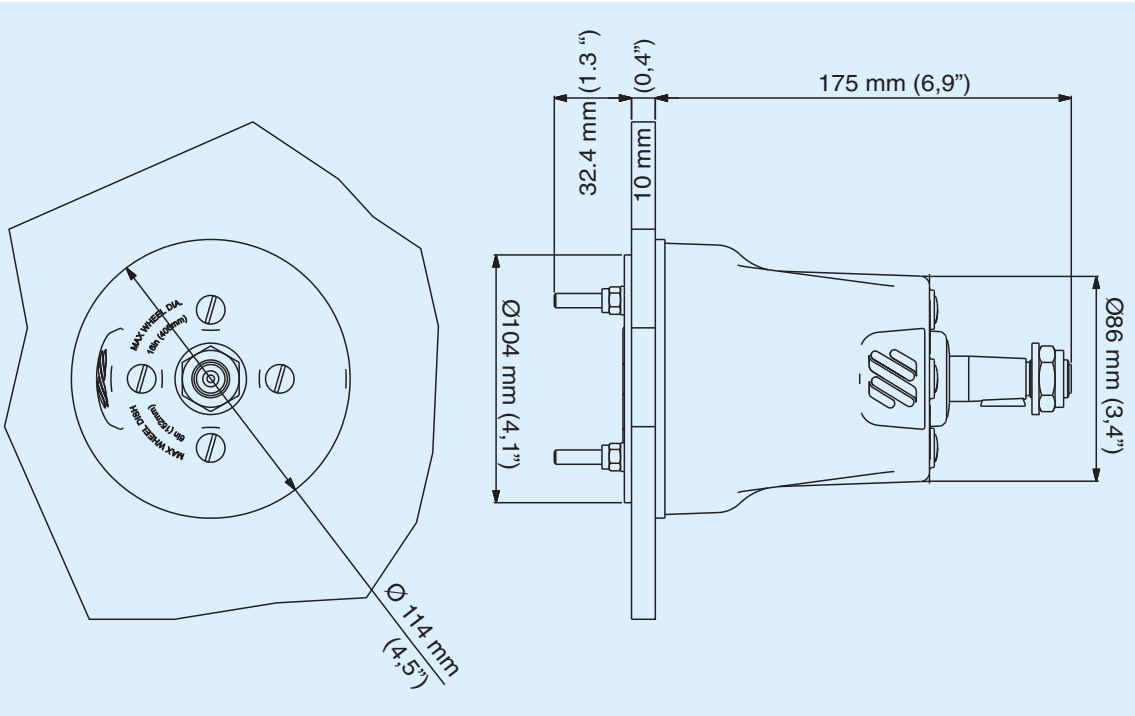

UHD32-F, UHD32-T, UHD40-F and UHD40-T DIMENSIONS

SINGLE CYLINDER DUAL STATION APPLICATION

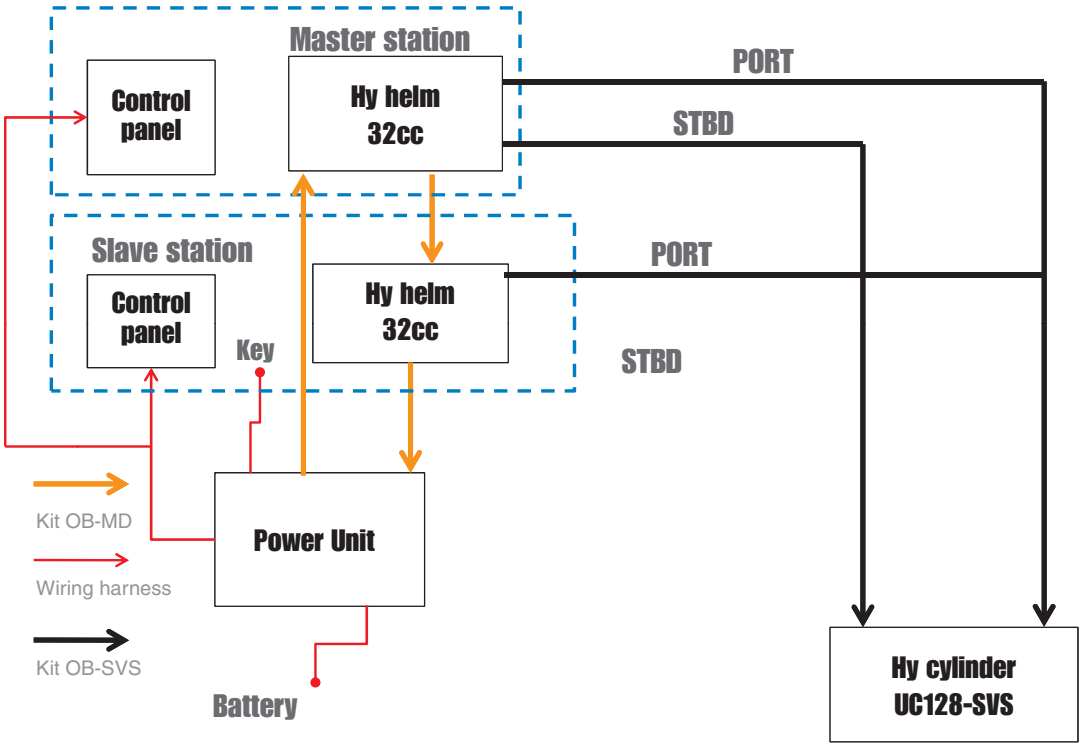

DUAL CYLINDER DUAL STATION APPLICATION

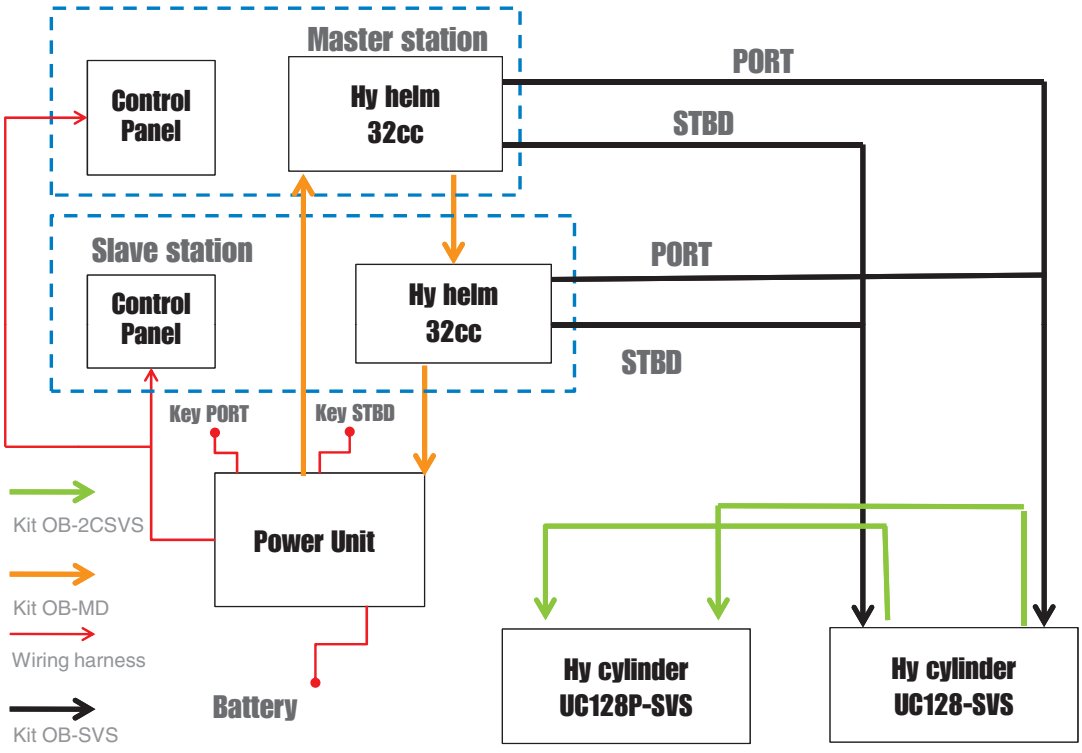

HOSE KITS

KIT OB-SVS	LENGTH	PART No.
KIT OB-SVS-10	1,00 m - 3.3 ft	41334 N
KIT OB-SVS-15	1,50 m - 4.9 ft	41800 S
KIT OB-SVS-20	2,00 m - 6.6 ft	41339 Z
KIT OB-SVS-25	2,50 m - 8.2 ft	42106 E
KIT OB-SVS-30	3,00 m - 9.8 ft	41286 E
KIT OB-SVS-35	3,50 m - 11.5 ft	41287 G
KIT OB-SVS-40	4,00 m - 13.1 ft	41288 J
KIT OB-SVS-45	4,50 m - 14.8 ft	41289 L
KIT OB-SVS-50	5,00 m - 16,4 ft	41290 V
KIT OB-SVS-55	5,50 m - 18.0 ft	41291 X
KIT OB-SVS-60	6,00 m - 19.7 ft	41292 Z

KIT OB-SVS

KIT OBMD	LENGTH	PART No.
KIT OBMD-10	1,00 m - 3.3 ft	42107 G
KIT OBMD-15	1,50 m - 4.9 ft	42108 J
KIT OBMD-20	2,00 m - 6.6 ft	42109 L
KIT OBMD-25	2,50 m - 8.2 ft	42110 V
KIT OBMD-30	3,00 m - 9.8 ft	42111 X
KIT OBMD-35	3,50 m - 11.5 ft	42112 Z
KIT OBMD-40	4,00 m - 13.1 ft	42113 B
KIT OBMD-45	4,50 m - 14.8 ft	42114 D
KIT OBMD-50	5,00 m - 16,4 ft	42115 F
KIT OBMD-55	5,50 m - 18.0 ft	42116 H
KIT OBMD-60	6,00 m - 19.7 ft	42117K

KIT OBMD

KIT OB-2C-SVS	LENGTH	PART No.
KIT OB-2C-SVS-07	0,7 m - 2.30 ft	41705 Y
KIT OB-2C-SVS-09	0,9 m - 2.95 ft	41706 A
KIT OB-2C-SVS-12	1,20 m - 3.95 ft	41707 C

KIT OB-2C-SVS

POWER ASSISTED OUTBOARD STEERING SYSTEM

ORDER GUIDE

APPLICATION	COMPONENTS	PART NUMBER	Q.TY
Single engine single cylinder	KIT MD32-F packaged MasterDrive™ kit includes 32cc front mount helm UC128/1-SVS SilverSteer™ cylinder (or UC128/2-SVS) KIT OB-SVS hydraulic hose kit KIT OBMD hydraulic hose kit Steering wheel	42098 J 41281 U (41282 W) specify length specify length wheel selection	1 1 1 1 1
	KIT MD32-T packaged MasterDrive™ kit includes 32cc tilt mount helm UC128/1-SVS SilverSteer™ cylinder (or UC128/2-SVS) KIT OB-SVS hydraulic hose kit KIT OBMD hydraulic hose kit X66 tilt mechanism Steering wheel	42100 S 41281 U (41282 W) specify length specify length 40613M wheel selection	1 1 1 1 1 1
Dual engine single cylinder	KIT MD32-F packaged MasterDrive™ kit includes 32cc front mount helm UC128/1-SVS SilverSteer™ cylinder (or UC128/2-SVS) KIT OB-SVS hydraulic hose kit KIT OBMD hydraulic hose kit Steering wheel A94 (or A88 or A92) tie bar	42098 J 41281 U (41282 W) specify length specify length wheel selection tie bar selection	1 1 1 1 1 1
	KIT MD32-T packaged MasterDrive™ kit includes 32cc tilt mount helm UC128/1-SVS SilverSteer™ cylinder (or UC128/2-SVS) KIT OB-SVS hydraulic hose kit KIT OBMD hydraulic hose kit X66 tilt mechanism Steering wheel A94 (or A88 or A92) tie bar	42100 S 41281 U (41282 W) specify length specify length 40613M wheel selection tie bar selection	1 1 1 1 1 1 1
Dual engine dual cylinder	KIT MD40-F packaged MasterDrive™ kit includes 40cc front mount helm UC128/1-SVS SilverSteer™ cylinder (or UC128/2-SVS) UC128P/1-SVS SilverSteer™ port cylinder (or UC128P/2-SVS) KIT OB-SVS hydraulic hose kit KIT OBMD hydraulic hose kit KIT OB-2C-SVS hydraulic hose cylinder connection kit Steering wheel A90 tie bar	42102 W 41281 U (41282 W) 41328 U (41329 W) specify length specify length specify length wheel selection 40138 H	1 1 1 1 1 1 1 1
	KIT MD40-T packaged MasterDrive™ kit includes 40cc tilt mount helm UC128/1-SVS SilverSteer™ cylinder (or UC128/2-SVS) UC128P/1-SVS SilverSteer™ port cylinder (or UC128P/2-SVS) KIT OB-SVS hydraulic hose kit KIT OBMD hydraulic hose kit KIT OB-2C-SVS hydraulic hose cylinder connection kit X66 tilt mechanism Steering wheel A90 tie bar	42104 A 41281 U (41282 W) 41328 U (41329 W) specify length specify length specify length 40613 M wheel selection 40138 H	1 1 1 1 1 1 1 1 1
For a second station add: **KIT MD2 for dual station** **KIT OBMD hydraulic hose kit** **KIT OB-SVS hydraulic hose kit** **KIT OB-2C-SVS (for use with dual cylinder only)**		**specify kit** **specify length** **specify length** **specify length**	**1** **1** **2** **1**

Attention:
MasterDrive™ system is intended for use with SilverSteer™ UC128-SVS cylinders only

NOTE:
On request, Power Unit wiring harness can be cut to length required
7 m (23 ft) Panel extension cable also available - 42636 L

A88 - A92
UNIVERSAL TIE BARS FOR TWIN OUTBOARD ENGINES

Universal tie bars suitable for all outboard applications (racing application excepted) with single or dual cylinder.
Electropolished stainless steel ball joint.

A88 - 40128 E

- All stainless steel components
- Applicable to twin outboard engines using mechanical steering also
- Adjustable from 650 mm (25.6”) to 950 mm (37.4”) engine centers

WARNING: On those applications where the clearance between engine tiller arms and cowling is not sufficient fot the use of the **A88**, the **A92** tie bar is recommended

A88

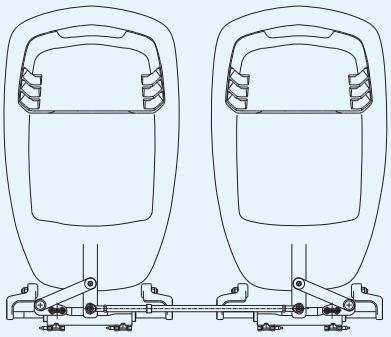

A88 application example

A92/700 - 40892 V
A92/950 - 40893 X

- Easily adjustable before or after installation
- All stainless steel components
- Applicable to twin outboard engines using mechanical steering also
- **A92/700:** Adjustable from 550 mm (21.6”) to 700 mm (27.5”) engine centers
- **A92/950:** Adjustable from 700 mm (27.5”) to 950 mm (37.4”) engine centers

A92

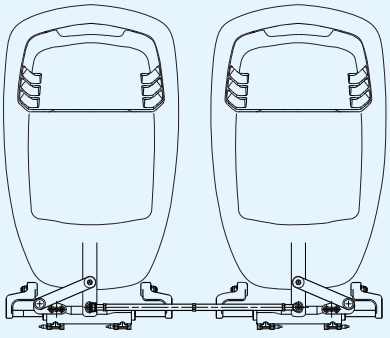

A92 application example

ATTENTION: As the tiller arm position varies from engine to engine and the distance between two engines is not predictable, unexpected interferences may occur while tilting. A duly check of the tie bar installation is then strongly recommended.
Should you need additional information, please do not hesitate to refer to our Technical Service.

A94
TWIN OUTBOARD ENGINE/SINGLE
UC128-OBF or UC128-SVS CYLINDER TIE BAR

A94 - 41204Z

- Suitable for applications with single UC128-OBF (or UC128-SVS) front mount cylinder
  NOTE: In the applications with dual cylinder use **A90** tie bar
- Allows to tilt the engines independently
- Stainless steel components
- Electropolished stainless steel ball joints
- Not recommended for applications exceeding 500 HP
- Adjustable from 660 mm (26”) to 950 mm (37.4”) engine centers

ATTENTION: As the tiller arm position varies from engine to engine and the distance between two engines is not predictable, unexpected interferences may occur while tilting. A duly check of the tie bar installation is then strongly recommended. Should you need additional information, please do not hesitate to refer to our Technical Service.

A94

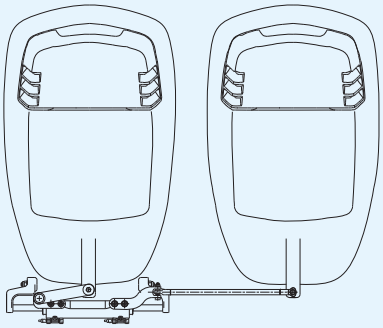

A94 application example

A94 TIE BAR APPLICATIONS

WARNING
These recommendations should be used as a general reference only. For any further information please contact our Technical Service.

ENGINE	POWER
Mercury®	135-150-175 Optimax 2 Stroke 200-225 Optimax 2 Stroke 250 PRO XS 135-150-175 Verado 4 Stroke 200 Verado 4 Stroke
Honda®	115-135-150 OHC BF 200 SOHC BF 225 A6
Yamaha®	F115-150-200-225-250 4 Stroke
Evinrude®	E115-130-150-175-200 V6 E200-225-250-300
Suzuki®	DF70-80-90 4 Stroke DF100-115-140-150-175 4 Stroke DF200-250-300 DOHC 4 Stroke

UC128 + A94

A90
TWIN OUTBOARD ENGINE/TWIN UC128-OBF or UC128-SVS CYLINDER TIE BAR

A90 - 40138 H

- Suitable for applications with dual UC128-OBF (or UC128-SVS) front mount cylinder
  NOTE: in applications with single cylinder use A94 tie bar
- All stainless steel components
- Electropolished stainless steel ball joints
- Allows to tilt the engines independently
- Applicable to engine centers variable from 660 mm (26") to 950 mm (37.4").

WARNING: In the applications with dual UC128-OBF (or UC128-SVS) cylinder it is necessary to order a standard UC128-OBF (or UC128-SVS) cylinder (link arm attached to the starboard side of the cylinder) and a UC128P-OBF (or UC128P-SVS) port cylinder (link arm attached to the port side of the cylinder).

UC128 starboard cylinders:
UC128-OBF/1 - 39423 Z
UC128-OBF/2 - 39966 R
UC128-OBF/3 - 39967 T
UC128/1-SVS - 41281 U
UC128/2-SVS - 41282 W
UC128/3-SVS - 41283 Y

UC128P port cylinders:
UC128P-OBF/1 - 40106 U
UC128P-OBF/2 - 40107 W
UC128P/1-SVS - 41328 U
UC128P/2-SVS - 41329 W

A90

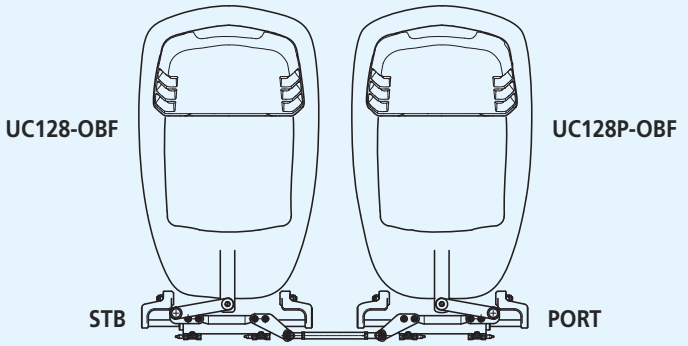

A90 Application example

UC128 + A90

A93
TRIPLE OUTBOARD ENGINE/TWIN UC128-OBF OR UC128-SVS CYLINDER TIE BAR

A93

- 4 different lengths available:
  A93 x 26 - 42613 Y - 26" (660,4 mm) twin engine centers
  A93 x 27 - 42637 N - 27" (685,8 mm) twin engine centers
  A93 x 28 - 42638 R - 28" (711,2 mm) twin engine centers
  A93 x 30 - 42639 T - 30" (762,0 mm) twin engine centers
  Specify engine type and required length on ordering
- AISI 304 electropolished and passivated stainless steel tie bars
- Easy to install, allow for independent trimming of engines with minimal effect on engine alignment

ATTENTION: As the tiller arm position varies from engine to engine and the distance between two engines is not predictable, unexpected interferences may occur while tilting. A duly check of the tie bar installation is then strongly recommended.
Should you need additional information, please do not hesitate to refer to our Technical Service.

A93

A93 X LL X ENGINE MODEL
LL = ENGINE CENTER DISTANCE

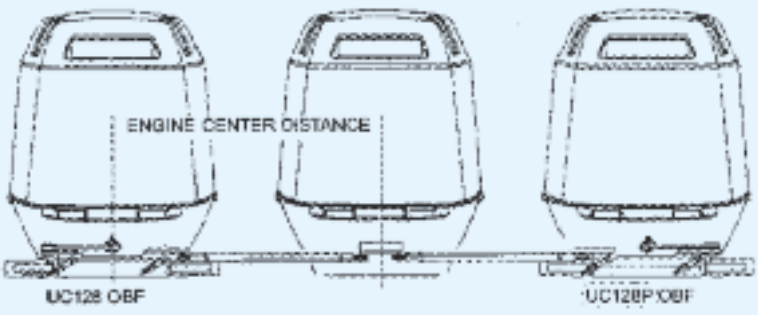

UC133-IOB
Balanced cylinder: the number of turns lock to lock is equal port to starboard or vice-versa

WARNING:
UC132-OBS cylinder is not intended for use with SilverSteer™ SVS Series helms

UC132-OBS
Unbalanced cylinder: the number of turns lock to lock is not equal port to starboard or vice-versa

SPECIFICATIONS	**UC133-IOB** - 39429 M **Balanced**	**UC132-OBS** - 39430 W **Unbalanced**
Volume	132 cc - 8 cu. in	132 / 163 cc - 8 / 9.95 cu. in
Torque	66 kgm - - 5738 lbs. in	
Output force	464 kg -1023 lbs	464 / 574 kg - 1023 / 1265 lbs
Inside diameter	32 mm - 1.25”	32 mm - 1.25”
Stroke	203 mm - 8”	203 mm - 8”
3/8” (9,5 mm) Fittings	For high pressure flex hose	For high pressure flex hose

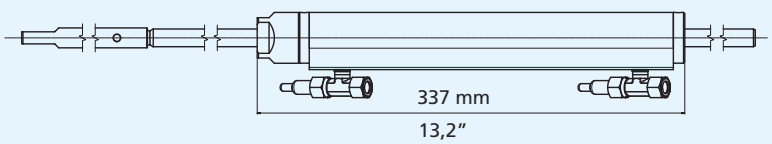

UC133-IOB

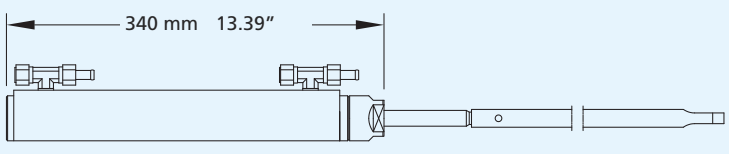

UC132-OBS

STERNDRIVE CYLINDERS

APPLICATIONS

WARNING These recommendations should be used as general reference only and they apply to factory stock sterndrives only. In doubt, contact a qualified installation technician.

ENGINE	YEAR	MODEL	STERNDRIVE CYLINDERS			
			non power assist engine	see notes	power assisted engine	see notes
MERCRUISER®	To date	ALPHA	UC133-IOB	1, 3	UC132-OBS	2
	To date	BRAVO ONE	UC133-IOB	1, 3	UC132-OBS	2
	To date	BRAVO TWO	UC133-IOB	1, 3	UC132-OBS	2
	To date	BRAVO THREE	UC133-IOB	1, 3	UC132-OBS	2
VOLVO®	To date	275	UC168-I		N/D	
	To date	280	UC133-IOB	1, 3, 4	UC132-OBS	2
	To date	290	UC133-IOB	1, 3, 4	UC132-OBS	2
	To date	DP-E	UC133-IOB	1, 3, 5	UC133V-IOB	
	To date	DP-G	N/A		UC133V-IOB	
	To date	DP-S	N/A		UC132-OBS	2

1. Balanced cylinder the number of turns lock to lock is equal port to starboard or vice-versa
2. Unbalanced cylinder the number of turns lock to lock is not equal port to starboard or vice-versa
3. Clearance required at the engine tube side: 21.2" (540 mm).
4. ULTRAFLEX hydraulic cylinder can be installed as an alternative to a mechanical steering system only.
5. The Volvo P. No. 872388 adaptor fitting is required for the installation.

NOTE: For applications with sterndrive engines not listed above, please contact our Technical Service.

ORDER GUIDE

NOTE: 3/8" or 10 mm diameter copper tubing can be used as an alternative tubing for plumbing the systems. For these applications a fitting kit – KIT 95 or KIT 100 – is required.

SYSTEM A	Turn lock to lock: Balanced 4.7 - Unbalanced 4.7/5.8 Max rudder torque: 66 kgm - 5738 lbs. in		
Components	**Model**	**Q.ty**	For additional station add: 1 UP28 helm pump, 1 KIT OB-2S fitting kit, 1 KIT OB hose Kit, extra OL 150, 1 steering wheel
Helm pump	UP28	1	
Cylinder	see application	1	
Hose Kit	KIT OB	1	
Oil	OL 150	3	
Steering wheel	(Wheel selection)	1	

SYSTEM B	Turn lock to lock: Balanced 4 - Unbalanced 4/5 Max rudder torque: 66 kgm - 5738 lbs. in		
Components	**Model**	**Q.ty**	For additional station add: 1 UP33 helm pump, 1 KIT OB-2S fitting kit, 1 KIT OB hose Kit, extra OL 150, 1 steering wheel
Helm pump	UP33	1	
Cylinder	see application	1	
Hose Kit	KIT OB	1	
Oil	OL 150	3	
Steering wheel	(Wheel selection)	1	

R5 - R5SS
BULKHEAD STRAIN RELIEF HOSE KIT

R5 kit distributes strain from bends in hose. It features a water tight gripper fitting and a bulkhead fitting flange for hose protection.
R5 - 39510 U
R5SS - 42419 C Bulkhead hose kit with stainless steel flange

R5

R5SS

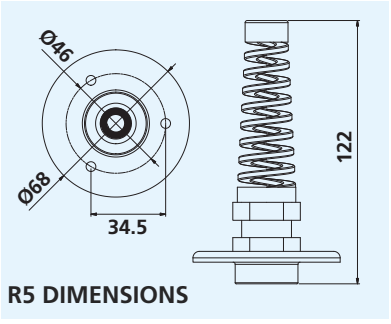

R5 DIMENSIONS

R7 - 3/4" BULKHEAD FITTING KIT

3/4" bulkhead fitting kit for single cylinder installation. 2 assemblies as illustrated per kit.
R7 - 40819 J

R7 KIT

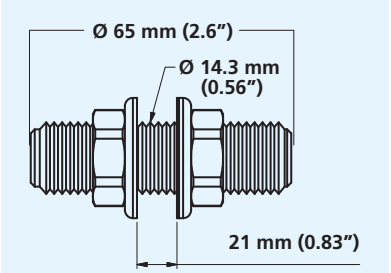

R7 DIMENSIONS

R8 - DUAL THRU-HULL HOSE KIT

Connection flange available in three different colours
R8B - Black 41299 P
R8W - White 41300 V
R8CH - Chrome 41301 X

R8B

R8W

R8CH

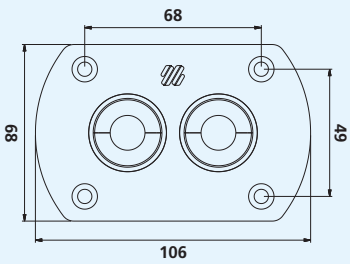

R8 DIMENSIONS

R9 - BULKHEAD KIT FOR DUAL HOSE WITH PREASSEMBLED FITTINGS

Connection flange available in three different colours
R9B - Black 41302 Z
R9W - White 41303 B
R9CH - Chrome 41304 D

R9B

R9W

R9CH

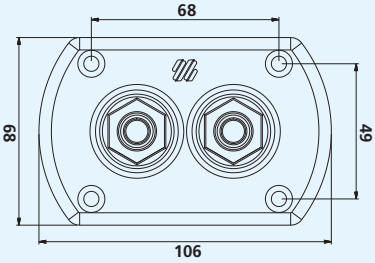

R9 DIMENSIONS

KIT OB-2S: FITTINGS FOR A SECOND STEERING STATION OR AUTOPILOT INSTALLATION

It includes all necessary fittings and 8 m (26.3 ft) of 3/8" dia. nylon tube for the compensating line

KIT OB-2S - 39539 V

KIT OB-2S

HOSES, FITTINGS, BEND RESTRICTORS FOR FLEXIBILITY OF THE INSTALLATIONS AND INTEGRATION WITH AUTOPILOT

TU1/4: 1/4" tubing for outboard engines applications with Gotech™ only.

TU5/16: 5/16" nylon tubing recommended for outboard engines applications and fittings OB-F5/16

OB-F1/4: 42656 T Two fittings featuring turning nut for use with 1/4" hydraulic hose for Gotech™ only.

OB-F5/16: 42670 L Two fittings featuring turning nut for use with 5/16" hydraulic hose and connection for 3/8" fitting

KIT 2M-5/16: 41822 C Kit with 2 bend restrictors 5/16"

TU95: 3/8" nylon tubing. It is not recommended in the applications where the total tubing run exceeds 50 ft (15 m). Not recommended for use with UC128-OBF and UC128-SVS cylinders

KIT 95-2S - 39518 L: Fitting kit for a second steering station or for an autopilot installation. It includes all necessary fittings for 3/8" nylon or copper tube.

OB-F1/4

OB-F5/16

KIT 2M-5/16

KIT 95-2S

ACCESSORIES

OL 150 - 42398 X:
Hydraulic oil sold in 1 litre (0.26 gallons) bottle

- Hydraulic oil: IS0 VG 15
- Viscosity: 15 cst a 40 °C
- Viscosity index: >150
- Solidification point: <- 30 °C
- Contamination according to NAS1638 ≤ 8

KIT F - 39664 Y:
Remote fill adapter for rear mount and tilt mount pumps.

OL 150

KIT F

61BCA - 71004 K
3/8" (9,5 mm) nut and sleeve assembly, brass

61CA - 71013 L
3/8" (9,5 mm) nut and sleeve assembly, nickel plated

AF45 - 41284 A
45° adjustable fitting, helm and tube.
Suitable for SilverSteer™ system **only**.

AF90 - 74144 U
90° adjustable fitting, nickel plated brass, for standard and SilverSteer™ pumps.

SF38 - 39471 L
3/8" (9,5 mm) connector fitting, helm and tube

SF12 - 41306 H
straight fitting, helm and tube Ø 12 mm

EF38 - 39472 N
3/8" (9,5 mm) 90° fitting for standard helms
part number:
37939 U - UP20 F
40153 D - UP20 T
39618 R - UP25 F
41273 V - UP25NV F
39443 F - UP28 F
39422 X - UP33 F
41275 Z - UP33NV F
39415 A - UP39 F
41276 B - UP45 F
40803 T - UP25 T
39445 K - UP28 T
39446 M - UP33 T
39447 P - UP39 T
41227 D - UP45 T
39970 F - UP28 R
39969 X - UP33 R
39444 H - UP39 R
41278 F - UP45 R

TF38 - 39502 V
3/8" (9,5 mm) union T for tube

VF38 - 39503 X
3/8" (9,5 mm) bleed T for cylinder, brass

VFN38 - 39925 A
3/8" (9,5 mm) bleed T for cylinder, nickel plated

VFNO38 - 40868 Y
3/8" (9,5 mm) adjustable bleed T for cylinder, nickel plated, for all cylinders except UC94-OBF with serial number prior to 30 1156 000001

QCFN - 41307 K
Quick connect bleed T for cylinder, nickel plated, for all cylinders except UC94-OBF with serial number prior to 30 1156 000001

QCFN94 - 41308 M
Quick connect bleed T for cylinder, nickel plated with DN5 quick connect,
for UC94-OBF cylinders with serial number prior to 30 1156 000001

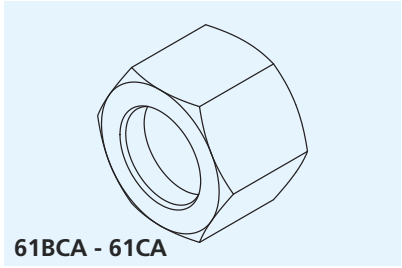
61BCA - 61CA

AF45

AF90

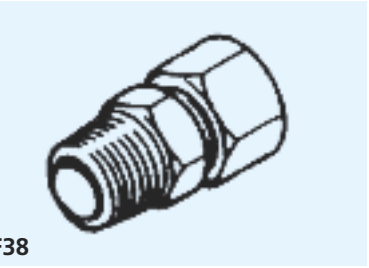
SF38

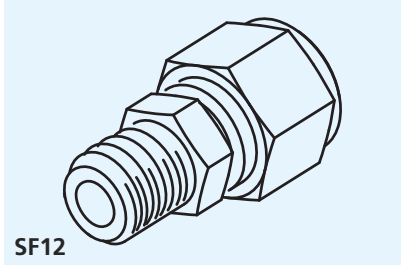
SF12

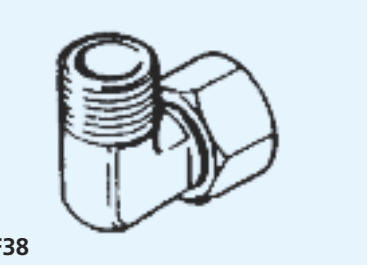
EF38

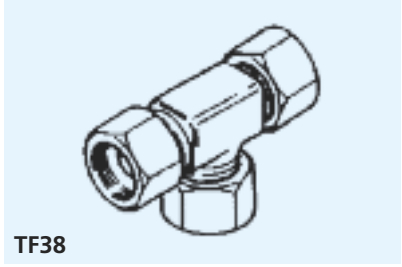
TF38

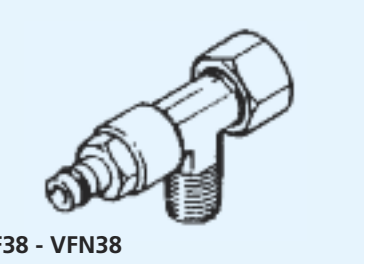
VF38 - VFN38

VFNO38

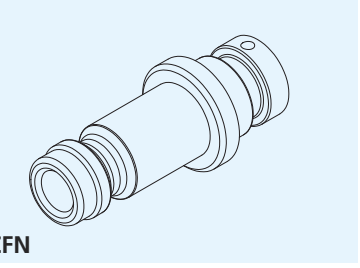
QCFN

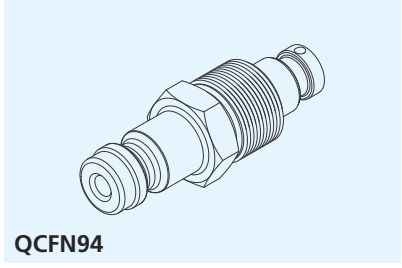
QCFN94

BubbleBuster™
A PORTABLE DEVICE FOR AUTOMATIC FILLING AND PURGING OF HYDRAULIC SYSTEMS

Reduce time and simplify purging hydraulic steering systems with the self contained and portable BubbleBuster™ purging unit.

Attach the hoses using the quick connect fittings to the helm and cylinder and with the push of a button the BubbleBuster™ begins cycling oil throughout the entire systems free of air.

The system features a ZeroEmulsion pump, 1 gal capacity reservoir and is compatible with competing helms and cylinders.

BubbleBuster™

COMPONENTS INCLUDED

- No. 1 motor pump with safety valve , switch and 5 litres (1 gal) tank included, it allows the purging of 2 hydraulic steering systems before refilling. 12V electric motor with thermal protection; current absorption 8 A
- No. 1 4m (13') electric harness with alligator clips for fast connection with the battery.
- No. 1 double spiralled hose to connect to helm pump. Extended length: 6m (19,6')
- No. 1 double spiralled hose to connect to cylinder. Extended length: 6m (19,6')
- No. 1 utility tray

OPTIONAL COMPONENTS

- **KBE1**: No. 1 double spiralled hose to connect to cylinder 15 m (49') extension
- **KBD2**: No. 1 kit for double cylinder systems filling and purge
- **KH94**: Connection kit for UC94-OBF cylinders with old bleeders (not fast connect)
- **KH128**: Connection kit for cylinders (except UC94) with old bleeders (not fast connect)

MODEL	P. No.	DESCRIPTION
BB	41666 R	BubbleBuster™ - complete set
KBE1	41682 N	Extension kit
KBD2	41703 U	Double cylinder purging kit
KH94	41899 R	Connection kit for UC94-OBF cylinder with old fittings
KH128	41900 W	Connection kit for cylinders with old fittings (except UC94)

INBOARD STEERING SYSTEMS

SINGLE STEERING STATION INSTALLATION DIAGRAM

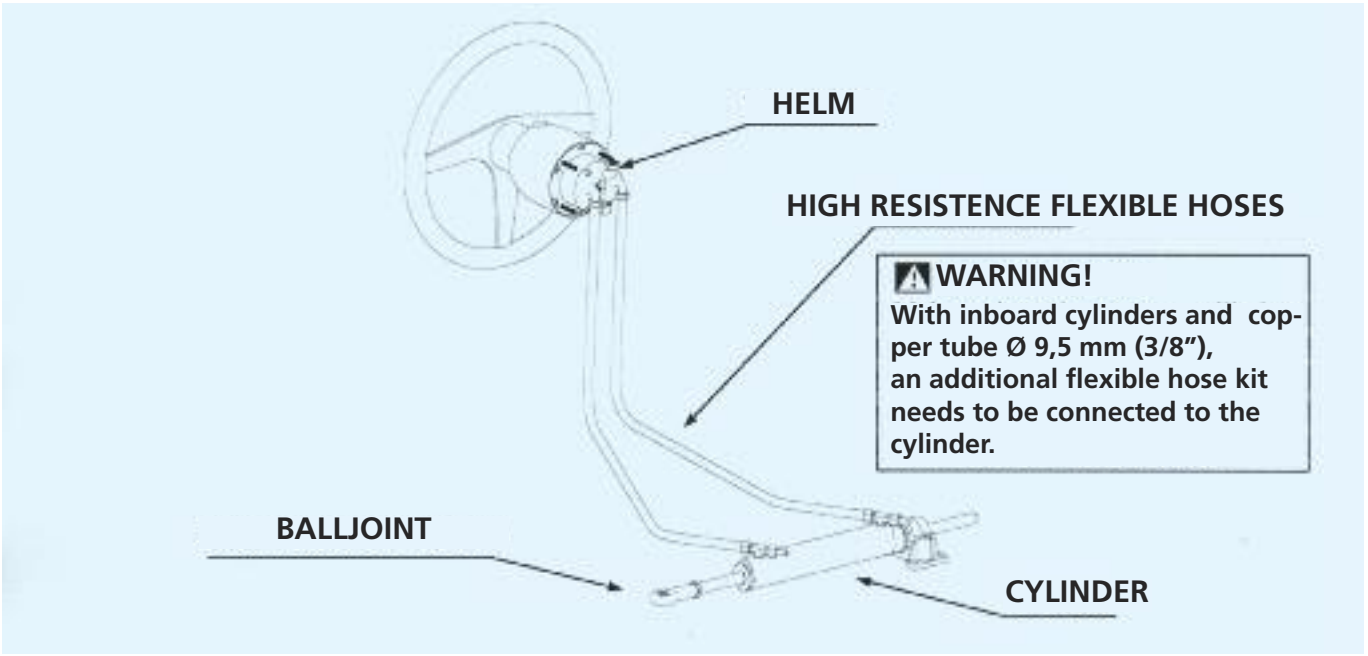

DUAL STEERING STATION INSTALLATION DIAGRAM

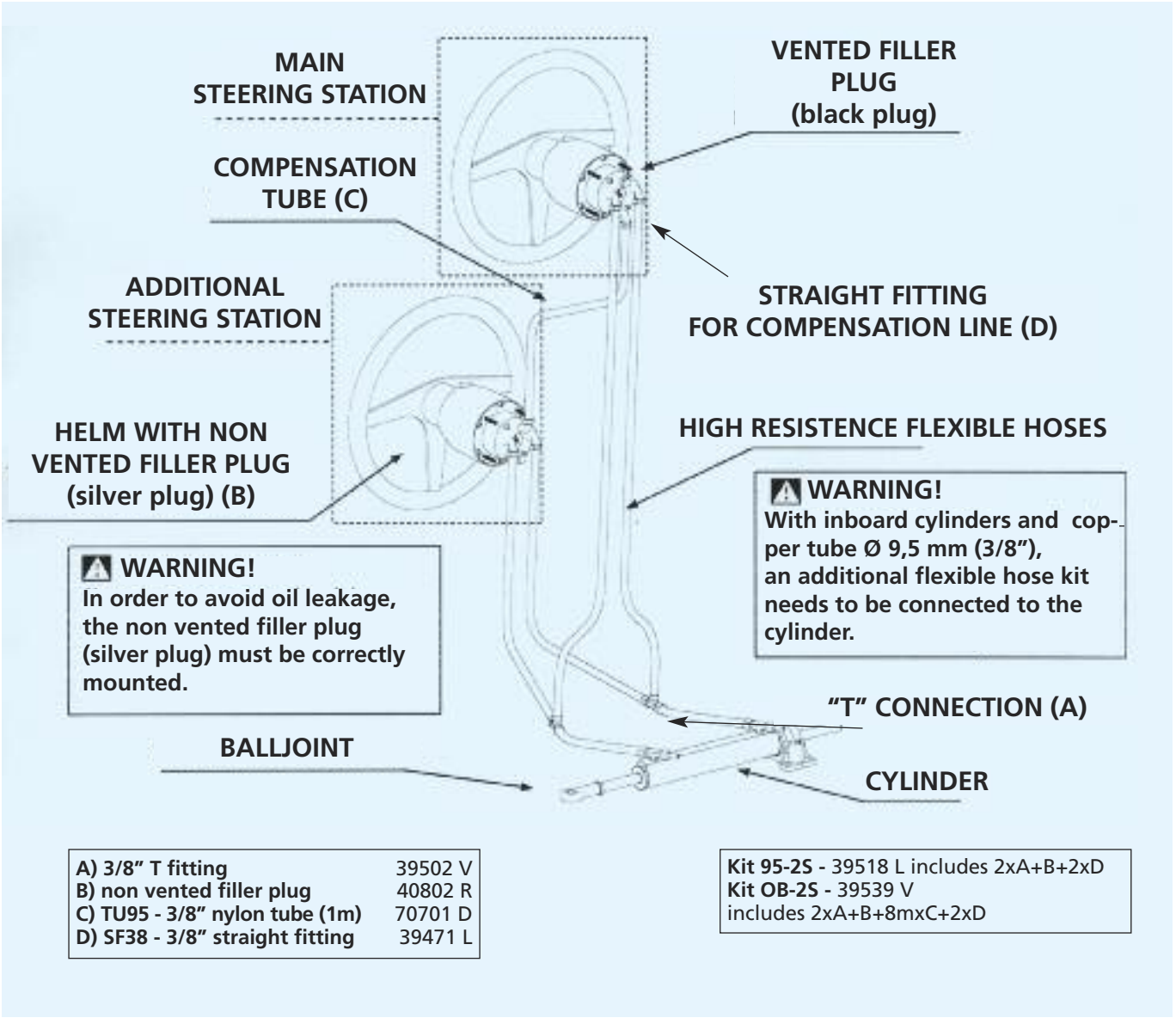

A) 3/8" T fitting	39502 V
B) non vented filler plug	40802 R
C) TU95 - 3/8" nylon tube (1m)	70701 D
D) SF38 - 3/8" straight fitting	39471 L

Kit 95-2S - 39518 L includes 2xA+B+2xD
Kit OB-2S - 39539 V
includes 2xA+B+8mxC+2xD

INBOARD STEERING SYSTEM APPLICATION GUIDE

BOAT LENGTH	UP to 10 m (33')	UP to 10 m (33')	UP to 10 m (33')	10 ÷ 12 m (33' ÷ 40')	10 ÷ 12 m (33' ÷ 40')	12 ÷ 14 m (40' ÷ 46')	14 ÷ 16 m (46' ÷ 53')	16 ÷ 18 m (53' ÷ 59')	18 ÷ 20 m (59' ÷ 66')
CYLINDER / HELM PUMP	UC69-I	UC116-I	UC168-I	UC215-I	UC293-I	UC339-I	UC378-I	UC442-I	UC530-I
UP20	3,5 N - 3/8"								
UP25		4,6 N - 3/8"	6,72 L - 3/8"	8,6 L - 3/8"					
UP28		4,1 M - 3/8"	6 N - 3/8"	7,6 L - 3/8"					
UP33		3,5 H - 3/8"	5,1 M - 3/8"	6,5 N - 3/8"	8,8 L - 3/8"				
UP39			4,3 H - 3/8"	5,5 M - 3/8"	7,5 N - 3/8"	N/A			
UP39-I R				N/A	N/A	8,6 N - R7	9,6 L - R7		
UP45					6,5 M - 3/8"	N/A	N/A		
UP45-I R						7,5 M - R7	8,4 N - R7	9,8 N - R7	11,5 L - R7
UP56						6,0 P - R7	6,7 M - R7	7,9 N - R7	9,5 N - R7
UP68							5,5 P - R7	6,5 M - R7	7,8 N - R7

STEERING WHEEL TURNS LOCK TO LOCK	STEERING WHEEL FEELING	HOSE TYPE
	L=LIGHT	3/8"= 5/16 HOSE AND FITTINGS OR KIT-OB/M
	N=NORMAL	
	M= MEDIUM	R7 = TUR7 FLEXIBLE HOSE AND FR7 FITTINGS
	P= HEAVY	

WARNING: These recommendations should be used as a general reference only. Final selection should be made with the assistance of a qualified installation technician. For any further information please contact our Technical Service

Photo courtesy of Fluid Motion

UP20 F - UP25 F
UP28 F - UP33 F
UP39 F - UP45 F
FRONT MOUNT HELM PUMPS

FEATURES

- Available in six different displacement sizes
- Compact design
- Ball bearing piston race
- Built-in lock valve for positive rudder lock
- Integral relief valve for over-pressure protection
- 3/4" tapered shaft. Stainless steel, except UP20
- Easily accessible lock valve and shaft seal for replacement
- Includes 90° **adjustable** fittings for 3/8" tube
- **X64** - 40198 C square flange (for all models) or **X57** - 39464 P (for all models except UP20) round flange permit to install the pumps in an intermediate dashboard position.

UP20 F

UP25 F/28 F/33 F/39 F/45 F

UP25 F/28 F/33 F
39 F/45 F + X64

UP25 F/28 F/33 F
39 F/45 F + X57

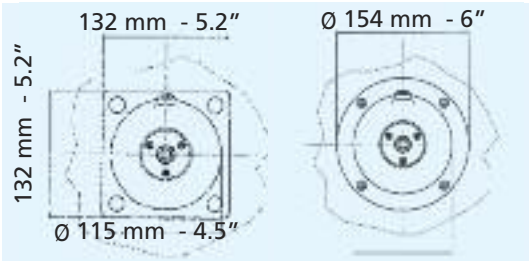

X64 **X57**

MODEL	P. No.	MOUNTING	DISPLACEMENT/ REVOLUTION	No. OF PISTONS	RELIEF VALVE SETTING	MAXIMUM WHEEL DIA.	WEIGHT
UP20 F	**42468 S**	Front mount	20 cc - 1.2 cu.in	5	70 Bar - 1000 PSI	508 mm - 20"	3,6 kg - 8 lbs
UP25 F	**42462 D**	Front mount	25 cc - 1.5 cu.in	5	70 Bar - 1000 PSI	710 mm - 28"	5 kg - 11 lbs
UP28 F	**42459 R**	Front mount	28 cc - 1.7 cu.in	5	70 Bar - 1000 PSI	710 mm - 28"	5 kg - 11 lbs
UP33 F	**42456 J**	Front mount	33 cc - 2.0 cu.in	7	70 Bar - 1000 PSI	710 mm - 28"	5 kg - 11 lbs
UP39 F	**42453 C**	Front mount	39 cc - 2.4 cu.in	7	70 Bar - 1000 PSI	710 mm - 28"	5 kg - 11 lbs
UP45 F	**42465 K**	Front mount	45 cc - 2.7 cu.in	7	70 Bar - 1000 PSI	710 mm - 28"	5 kg - 11 lbs

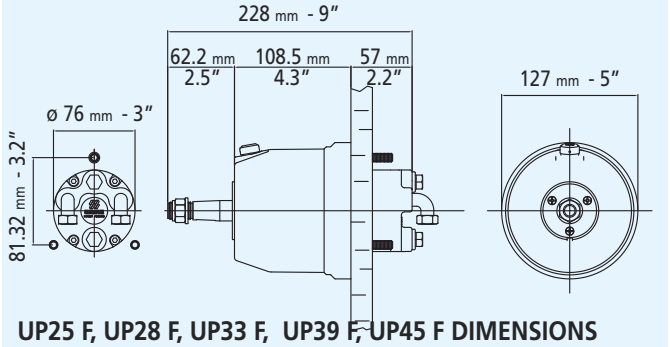

UP25 F, UP28 F, UP33 F, UP39 F, UP45 F DIMENSIONS

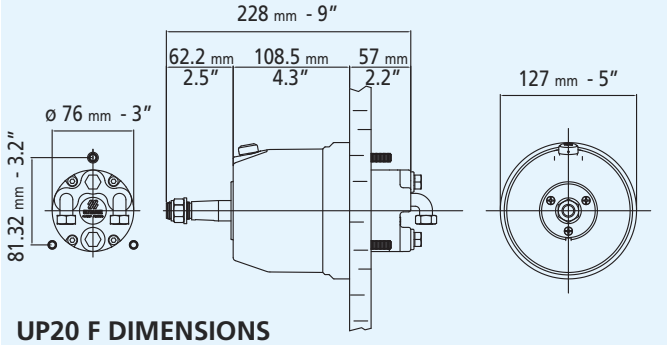

UP20 F DIMENSIONS

UP28 R - UP33 R - UP39 R
UP39-I R - UP45 R - UP45-I R
REAR MOUNT
HELM PUMPS

FEATURES

- Available in four different displacement sizes
- Compact design
- Ball bearing piston race
- Built-in lock valve for positive rudder lock
- Integral relief valve for over-pressure protection
- 3/4" tapered stainless steel shaft
- Easily accessible lock valve and shaft seal for replacement
- Cast iron cylinder rotor for greater durability and longer life
- White bezel included
- Complete with 90° **adjustable** fittings for 3/8" tube, except UP39-I R and UP45-I R pumps (straight fittings for 12 mm hose)
- **X68** (optional) - 40894 Z Chrome bezel
- **KIT F** (optional) - 39664 Y Remote fill adapter

KIT F

X68

MODEL	P. No.	MOUNTING	DISPLACEMENT/ REVOLUTION	No. OF PISTONS	RELIEF VALVE SETTING	MAXIMUM WHEEL DIA.	WEIGHT
UP28 R	**42460 Z**	Rear mount	28 cc - 1.7 cu.in	5	70 Bar - 1000 PSI	710 mm - 28"	5 kg - 11 lbs
UP33 R	**42457 L**	Rear mount	33 cc - 2.0 cu.in	7	70 Bar - 1000 PSI	710 mm - 28"	5 kg - 11 lbs
UP39 R	**42454 E**	Rear mount	39 cc - 2.4 cu.in	7	70 Bar - 1000 PSI	710 mm - 28"	5 kg - 11 lbs
UP39-I R	**42557 R**	Rear mount	39 cc - 2.4 cu.in	7	70 Bar - 1000 PSI	710 mm - 28"	5 kg - 11 lbs
UP45 R	**42466 M**	Rear mount	45 cc - 2.7 cu.in	7	70 Bar - 1000 PSI	710 mm - 28"	5 kg - 11 lbs
UP45-I R	**41279 H**	Rear mount	45 cc - 2.7 cu.in	7	70 Bar - 1000 PSI	710 mm - 28"	5 kg - 11 lbs

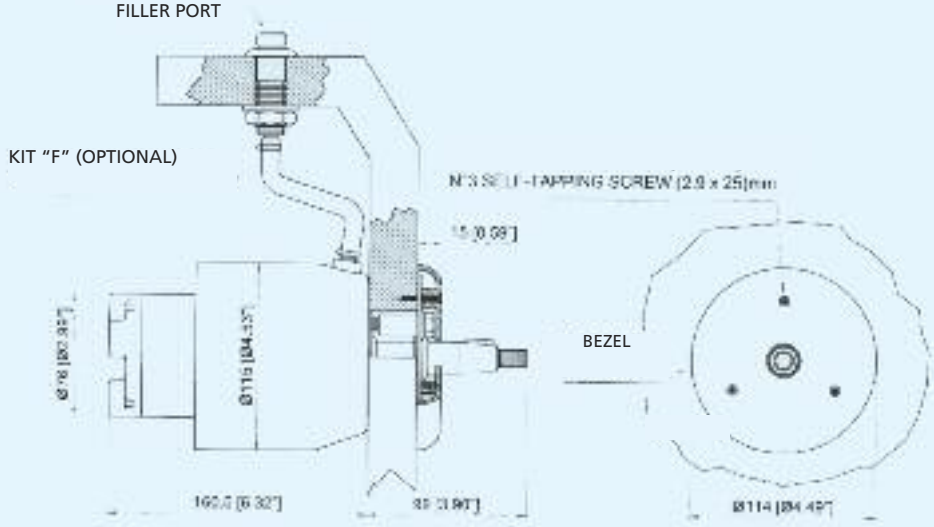

UP28 R, UP33 R, UP39 R, UP39-I R, UP45 R, UP45-I R DIMENSIONS

UP56 - UP68
HELM PUMPS

FEATURES

- Rear or intermediate mounting configuration
- Ball bearing piston race
- Built-in lock valve for positive rudder lock
- 3/4" tapered shaft
- Easily accessible lock valve and shaft seal for replacement
- Brass rotor for greater durability and longer life
- 3/8" BSPP fitting for 12 mm tube
- Complete with fittings
- **KR56** (optional) - 42558 T permits to install the UP56 and UP68 pumps in a rear mount position. Includes chrome plated cover ring.
- **KIM56** (optional) - 42559 V hardware kit: permits to install the UP56 and UP68 pumps in an intermediate mount position

  NOTE: UP56 or UP68 installation needs either kit KR56 or KIM56

- **KIT F56** (optional) - 40813 W Remote fill adapter

KIT F56

KR56

MODEL	P. No.	MOUNTING	DISPLACEMENT/ REVOLUTION	No. OF PISTONS	RELIEF VALVE SETTING	MAXIMUM WHEEL DIA.	WEIGHT
UP56	**40808 D**	Rear (KR56) - Intermediate (KIM56)	56 cc - 3.4 cu.in	7	70 Bar - 1000 PSI	710 mm - 28"	7,5 kg - 16,5 lbs
UP68	**42561 F**	Rear (KR56) - Intermediate (KIM56)	68 cc - 4.15 cu.in	7	70 Bar - 1000 PSI	710 mm - 28"	7,5 kg - 16,5 lbs

RV70 - 42560 D **- RELIEF VALVE 70 BAR**

WARNING: Applications with UP56 or UP68 pumps require the RV70 relief valve added to the system for over-pressure protection.

RV70

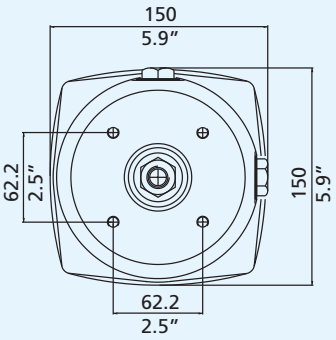

UP56, UP68

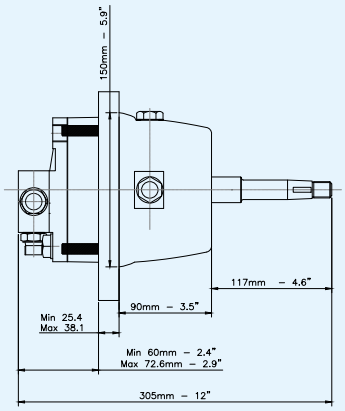

UP56, UP68 INTERMEDIATE MOUNT

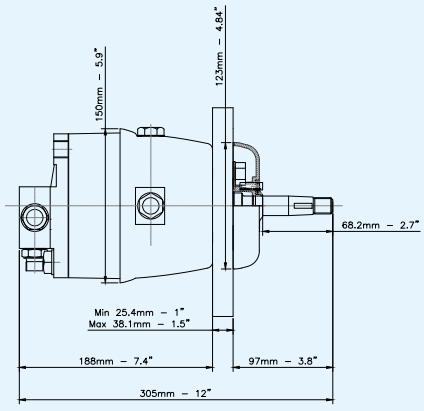

UP56, UP68 REAR MOUNT

UC69-I - Balanced: the number of turns lock-to-lock is equal port to starboard or vice-versa.

UC116-I; UC168-I; UC215-I
All balanced cylinders: the number of turns lock-to-lock is equal port to starboard and vice-versa

SPECIFICATIONS	**UC69-I** - 39782 E	**UC116-I** - 39431 Y **Alluminum**	**UC168-I** - 39432 A **Alluminum**	**UC215-I** - 39433 C **Alluminum**
Volume	69 cc - 4.2 cu. in	116 cc - 7 cu. in	168 cc - 10.25 cu.in	215 cc - 13.12 cu. in
Torque	32 kgm - 2783 lbs. in	58 kgm - 5043 lbs. in	87 kgm - 7565 lbs. in	111 kgm - 9652 lbs. in
Output force	168 kg - 371 lbs	464 kg - 1023 lbs	673 kg - 1483 lbs	673 kg - 1483 lbs
Inside diameter	25 mm - 0.98"	32 mm - 1.25"	40 mm - 1.57"	40 mm - 1.57"
Stroke	150 mm - 5.9"	178 mm - 7"	178 mm - 7"	228 mm - 9"
3/8" (9,5 mm) Fittings	For high pressure flex hose	For high pressure flex hose	For high pressure flex hose	For high pressure flex hose

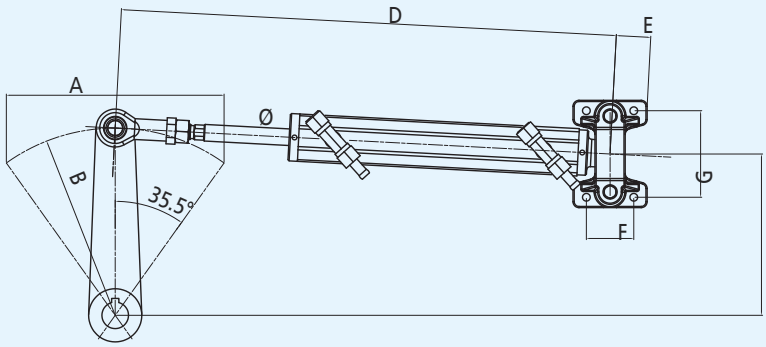

	UC69-I	UC116-I	UC168-I	UC215-I
A	150 mm - 5.9"	178 mm - 7"	178 mm - 7"	228 mm - 9"
B	129 mm - 5.11"	155 mm - 6.1"	155 mm - 6.1"	199 mm - 7.8"
C	105 mm - 4.13"	127 mm - 5"	127 mm - 5"	163 mm - 6.4"
D	417 mm - 16.42"	466 mm - 18.3"	512 mm - 20.1"	587 mm - 23.1"
E	31,3 mm - 1.23"	102 mm - 4"	107.5 mm - 4.2"	132.5 mm - 5.2"
F	40 mm - 1.57"	40 mm - 1.6"	40 mm - 1.6"	40 mm - 1.6"
G	73 mm - 2.87"	73 mm - 2.9"	105 mm - 4.1"	105 mm - 4.1"
Rod Ø	14 mm - 0.6"	14 mm - 0.6"	20 mm - 0,8"	20 mm - 0,8"

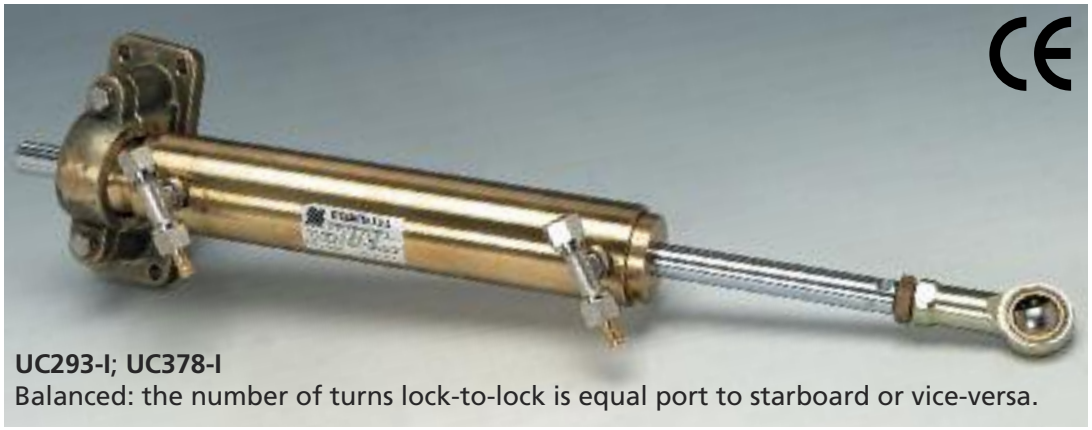

UC293-I; UC378-I
Balanced: the number of turns lock-to-lock is equal port to starboard or vice-versa.

SPECIFICATIONS	**UC293-I** - 40246 L **Brass**	**UC378-I** - 40810 P **Brass**
Volume	293 cc - 17.8 cu. in	376 cc - 22.94 cu. in
Torque	146,5 kgm - 12816 lbs. in	187,6 kgm - 16347 lbs. in
Output force	1155 kg - 2545 lbs	1155 kg - 2545 lbs
Inside diameter	50 mm - 1.97”	50 mm - 1.97”
Stroke	178 mm - 7”	228 mm - 9”
Fittings	3/8” (9,5 mm) for high pressure flex hose	for (12 mm) copper tube (flexible connection hoses included) or TUR7 high pressure flex hose

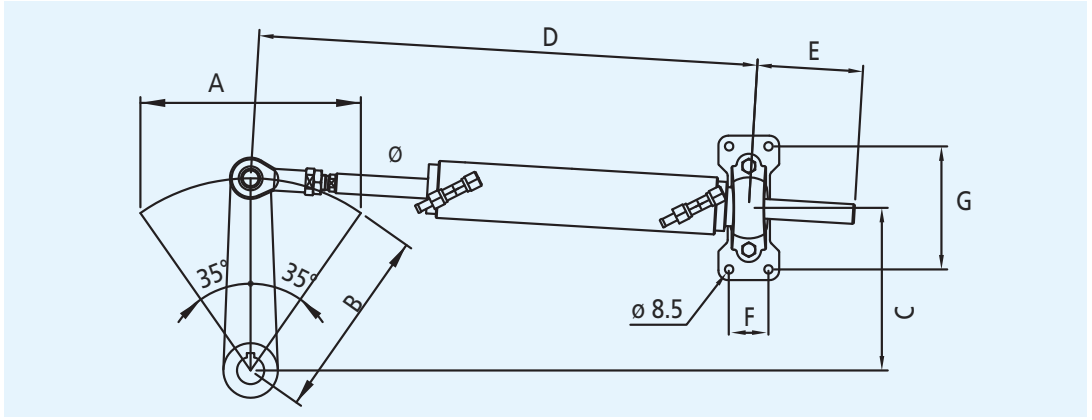

	UC293-I	UC378-I
A	178 mm - 7”	228 mm - 9”
B	163 mm - 6.4”	199 mm - 7.8”
C	134 mm - 5.2”	163 mm - 6.4”
D	506 mm - 19.9”	592 mm - 23.3”
E	107 mm - 4.2”	132,5 mm - 5.2”
F	40 mm - 1.6”	40 mm - 1.6”
G	125 mm - 4.9”	125 mm - 4.9”
Rod Ø	20 mm - 0.8”	20 mm - 0.8”

UC339-I; UC442-I
Balanced: the number of turns lock-to-lock is equal port to starboard or vice-versa.

UC530-I
Balanced: the number of turns lock-to-lock is equal port to starboard or vice-versa.

SPECIFICATIONS	UC339-I 42562 H	UC442-I 42563 K	UC530-I 42564 M
Volume	339 cc – 20.7 cu.in	442 cc – 26.9 cu.in	530 cc – 32.3 cu.in
Torque	172 kgm – 14957.7 lbs.in	223 kgm – 19335.6 lbs.in	270 kgm – 23443.4 lbs.in
Output force	1051 kg – 2316.6 lbs	1051 kg – 2316.6 lbs	1513 kg – 3335.9 lbs
Inside diameter	50 mm – 1.97"	50 mm – 1.97"	60 mm – 2.36"
Stroke	230 mm – 9"	300 mm – 12"	250 mm – 10"
Fittings	For 12 mm copper tube or TUR7 high pressure flex hose	For 12 mm copper tube or TUR7 high pressure flex hose	For 12 mm copper tube or TUR7 high pressure flex hose

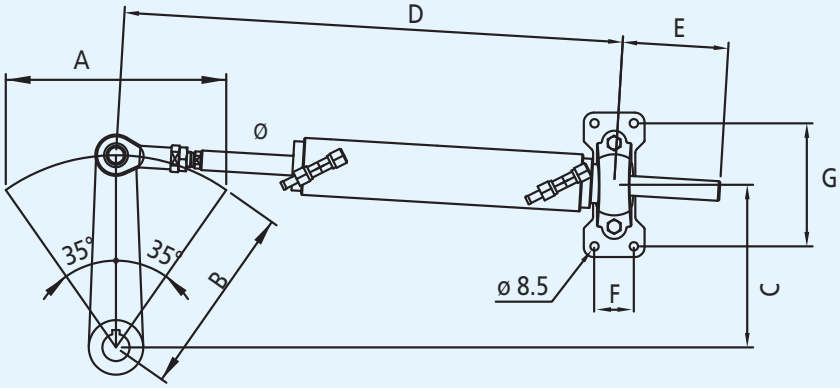

	UC339-I	UC442-I	UC530-I
A	230 mm – 9"	300 mm – 12"	250 mm – 10"
B	200 mm – 7.9"	260 mm – 10.2"	218 mm – 8.6"
C	164 mm – 6.5"	212 mm – 8.3"	178 mm – 7.0"
D	637 mm – 25.1"	749 mm – 29.5"	723 mm – 28.5"
E	147 mm – 5.8"	183 mm – 7.2"	168 mm – 6.6"
F	70 mm – 2.8"	70 mm – 2.8"	120 mm – 4.7"
G	110 mm – 4.3"	110 mm – 4.3"	104 mm – 4.1"
Rod Ø	25 mm – 0.98"	25 mm – 0.98"	30 mm – 1.18"

HOSES – ACCESSORIES - FITTINGS

KIT OB/M: HOSE KIT WITH PREASSEMBLED FITTINGS AT ONE END FOR SINGLE STATION INSTALLATION

Two high pressure flexible hoses with fittings featuring turning nuts preassembled at one end only. It is supplied with two spare fittings and two bend restrictors. Available in three standard lengths that can be cut to fit the required application.

KIT OB/M	LENGTH	P. No.
KIT OB/M-60	6,00 m - 19.7 ft	41708 E
KIT OB/M-90	9,00 m - 29.5 ft	41709 G
KIT OB/M-150	15,00 m - 49,2 ft	42565 P

TU5/16: 5/16" nylon tubing for OB-F5/16 fittings. Available per metre and 50 m (164 ft) coils.

OB-F5/16 - 42670 L: two reusable fittings featuring turning nut for use with 5/16" hydraulic hose and connection for 3/8" end fitting

TUR7: high pressure hydraulic hose for FR7 12mm end fittings. Available per metre and 50 m (164 ft) coils.

FR7 - 42569 Y: reusable fitting for use with 3/8" hydraulic hose and connection with 12 mm helm and cylinder fittings.

RV70 - 42560 D: relief valve required for use in inboard applications with UP56 and UP68 pumps.

KIT OB-2S - 39539 V: fitting kit for a second steering station or for an autopilot installation. It includes all necessary fittings for 3/8" flexible hose and 8 m (ft 26.3) of 3/8" dia. nylon tube for the conpensating line.

KIT 95 – 39516 G: 3/8" copper tube fitting kit. It includes one 1,0 m (3.2') nylon tube and all necessary fittings for a single station application.

KIT 120-I - 42765 Y: 12 mm copper tube fitting kit. It includes one 1,0 m (3.2') nylon tube and all necessary fittings for a single station application.

KIT 95-2S – 39518 L: fitting kit for a second steering station or for an autopilot installation. It includes all necessary fittings for 3/8" flexible hose or copper tube.

KIT 120U-2S - 41625 A: fitting kit for a second steering station or for an autopilot installation. It includes all necessary fittings for 12 mm flexible hose or copper tube in UP33-I R or UP45-I R applications.

BP 95 - 42829 Y: by-pass for 3/8" flexible hose

BP 56 - 42566 S: by-pass for 12 mm hose.
For use with UC339-I, UC442-I and UC530-I cylinders in installation with copper tube.
Connection flex hoses included.

KIT OB/M

OB-F5/16

FR7

RV70

KIT OB-2S

KIT 95 - KIT120-I

BP 95

BP 56

KIT 95-2S - KIT 120U-2S

ACCESSORIES

OL 150 - 42398 X:
Hydraulic oil sold in 1 litre (0.26 gallons) bottle
- hydraulic oil: 150 VG 15
- viscosity index: >150
- viscosity: 15 cts at 40°C
- solidification poin: < -30°C
- contamination according to NAS1638≤ 8

KIT F - 39664 Y:
remote fill adapter for rear mount UP28, UP33, UP39, UP45 pumps.

KIT F56 - 40813 W:
remote fill adapter for rear mount UP56 and UP68 pumps.

OL 150

KIT F - KIT F56 (adapter included)

ORDER GUIDE:

PUMP model	CYLINDER model	Whell turns Lock-to-lock	Max rudder torque	Flex hose or copper tube	Kit for a dual station installation
UP25 F	UC116-I	4,6	58 kgm 5043 lbs.in.	TU5/16 flex hose or 3/8" copper tube	KIT-OB-2S 39539 V or Kit 95-2S 39518 L
UP28 F or UP28	UC116-I	4,1	58 kgm 5043 lbs.in.	TU5/16 flex hose or 3/8" copper tube	KIT-OB-2S 39539 V or Kit 95-2S 39518 L
UP28 F or UP28 R	UC168-I	6,0	87 kgm 7565 lbs.in.	TU5/16 flex hose or 3/8" copper tube	KIT-OB-2S 39539 V or Kit 95-2S 39518 L
UP33 F or UP33 R	UC168-I	5,1	87 kgm 7565 lbs.in.	TU5/16 flex hose or 3/8" copper tube	KIT-OB-2S 39539 V or Kit 95-2S 39518 L
UP33 F or UP33 R	UC215-I	6,5	111 kgm 9642 lbs.in.	TU5/16 flex hose or 3/8" copper tube	KIT-OB-2S 39539 V or Kit 95-2S 39518 L
UP39 F or UP39 R	UC215-I	5,5	111 kgm 9642 lbs.in.	TU5/16 flex hose or 3/8" copper tube	KIT-OB-2S 39539 V or Kit 95-2S 39518 L
UP39 F or UP39 R	UC293-I	7,5	146,5 kgm 12816 lbs.in.	TU5/16 flex hose or 3/8" copper tube	KIT-OB-2S 39539 V or Kit 95-2S 39518 L
UP45 F or UP45 R	UC293-I	6,5	146,5 kgm 12816 lbs.in.	TU5/16 flex hose or 3/8" copper tube	KIT-OB-2S 39539 V or Kit 95-2S 39518 L
UP39-I R	UC339-I	8,6	172 kgm 14958 lbs.in	12mm copper tube or TUR7 flex hose	KIT120U-2S 41625 A
UP56* with KR56 or KIM56	UC339-I	6,0	172 kgm 14958 lbs.in	12mm copper tube or TUR7 flex hose	KIT120-2S 40821V
UP45-I R	UC378-I	8,4	187,6 kgm 16347 lbs.in.	12mm copper tube or TUR7 flex hose	KIT120U-2S 41625 A
UP56* with KR56 or KIM56	UC378-I	6,7	187,6 kgm 16347 lbs.in.	12mm copper tube or TUR7 flex hose	KIT120-2S 40821 V
UP56* with KR56 or KIM56	UC442-I	7,9	223 kgm 19336 lbs.in	12mm copper tube or TUR7 flex hose	KIT120-2S 40821 V
UP68* with KR56 or KIM56	UC442-I	6,5	223 kgm 19336 lbs.in	12mm copper tube or TUR7 flex hose	KIT120-2S 40821 V
UP68* with KR56 or KIM56	UC530-I	7,8	270 kgm 23443 lbs.in	12mm copper tube or TUR7 flex hose	KIT120-2S 40821 V

*** WARNING:** Applications with UP56 or UP68 pumps require the RV70 - 42560 D relief valve added to the system for over-pressure protection.

POWER ASSISTED STEERING SYSTEM

MD – Packaged kit for single station

MD2 – Packaged kit for dual station

MasterDrive™ SYSTEM FEATURES

- Eliminates torque at the steering wheel
- Three different selectable levels of power give the boater the desired feeling on the wheel (PATENTED).
- Automatically reverts to manual mode in case of power loss.
- High efficiency, low Amp draw
- The system always running permits immediate control in any sea conditions
- Equipped with safety switch ON/OFF (SMART BUTTON)
- Can be used on dual station installations
- Suitable for use with autopilot
- Low noise
- Voltage: 12VDC
- CE marked in conformity with ABYC P21, ISO 10592 safety standards
- Ignition protected (SAE J-1171 and UNI EN 28846)

SYSTEM COMPONENTS:

- 1 single packaged **KIT MD** for single station containing:
  - 1 **UH** Front or tilt mount Master Helm
  - 1 **UPMD** Power Unit, 15' (4,5 m) wiring harness included
  - 1 **UCMD** User Interface
  - 4 **OL 150** bottles of hydraulic oil
- 1 inboard cylinder (suggested model: see following page "order guide")
- 1 **KIT MD2** for dual station
- Flexible hydraulic hoses.
- 1 Tilt mechanism **X66** - 40613 M suitable for Tilt Mount Helm. Tilt range of 48° and five locking positions
- 1 Steering wheel: see selection
- 1 Instruction manual

NOTE:

The MasterDrive™ Helms (both the UH master and the UHD slave for a dual station), the UPMD Power Unit and the UCMD User Interface are the same products shown on the outboard MasterDrive™ systems.
For more details please refer to the outboard MasterDrive™ section.

ORDER GUIDE

SINGLE CYLINDER APPLICATION

Kit MasterDrive™	Cylinder	Wheel turns	Max Rudder torque	Connection flex hoses	Steering wheel
MD32F - 42098 J	**UC116** - 39431 Y	3,6	52 kgm 5043 lbs. in	1 kit OB-SVS (length selection) 1 kit OBMD (length selection)	1 steering wheel
MD32F - 42098 J	**UC168** - 39432 A	5,2	87 kgm 7565 lbs. in		
MD32F - 42098 J	**UC215** - 39433 C	6,7	111 kgm 9642 lbs. in		
MD40F - 42102 W	**UC215** - 39433 C	5,3	111 kgm 9642 lbs. in		
MD40F - 42102 W	**UC293** - 42246 L	7,3	146,5 kgm 12816 lbs. in		

DUAL CYLINDER APPLICATION

MD32F - 42098 J	2 **UC116** - 39431 Y	7,2	52 kgm 5043 lbs. in	1 kit OB-SVS (length selection)	1 steering wheel
MD40F - 42102 W	2 **UC168** - 39432 A	8,4	87 kgm 7565 lbs. in	1 kit OBMD (length selection)	
MD50F - 42830 G	2 **UC215** - 39433 C	8,6	111 kgm 9642 lbs. in	1 kit OB-2C-SVS (length selection)	

NOTE: On tilt applications, replace MD32F or MD40F MasterDrive™ kit with MD32T or MD40T kit + tilt mechanism X66 (optional).
Wheel selection: please refer to the appropriate section.

For a second station add:
1 Kit MD (select kit required by the needed installation)
2 Kit OB-SVS (select length required)
1 Kit OBMD (select length required)

NOTE:
On request, Power Unit wiring harness can be cut to length required.
7 m (23 ft) panel extension cable also available - 42636 L

PACKAGED INBOARD STEERING SYSTEMS

GOTECH-I - WHEEL TURNS 3,8 - 42824 M

For single engine up to 115 hp

GOTECH-I package contains:

UP18	Intermediate helm pump
UC69-I	Inboard cylinder
OL 150	Hydraulic oil - 2 litres
KIT OB-GT/M-60	Hose kit dia. 1/4" 6 m (19.7") length with fittings preassembled at one end only.

The wheel is not included

GOTECH-I - 42824 M

HYCO-I - WHEEL TURNS 3,5 - 40224 A

HYCO-I package kit contains:

UP20 F	Front mount helm pump.
UC69-I	Inboard cylinder.
OL 150	Hydraulic oil - 2 litres.
KIT OB-60	Hose kit with preassembled fittings. Length: 6 m (19.7')

HYCO-I not including flexible hoses or with Kit OB/M-60 or Kit OB/M-90 is available on request.
The wheel is not included.

WARNING: HYCO-I steering system is suitable for inboard boats up to approx. 10 m (32.8') length and 25 mph max speed.

HYCO-I - 40224 A

FITTINGS

61BCA - 71004 K
3/8" (9,5 mm) nut and sleeve assembly, brass

AF45 - 41284 A
45° adjustable fitting, helm and tube.

AF90 - 74144 U
90° adjustable fitting, nickel plated brass

SF38 - 39471 L
3/8" (9,5 mm) connector fitting, helm and tube

SF12 - 41306 H
straight fitting, helm and tube Ø 12 mm

VF38 - 39503 X
3/8" (9,5 mm) bleed T for cylinders, brass

QCFN - 41307 K
Quick connect bleed T for cylinder, nickel plated

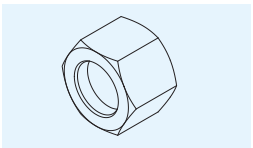

61BCA

AF45

AF90

SF38

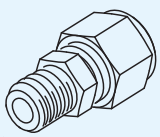

SF12

VF38

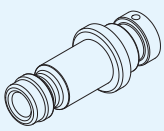

QCFN

STEERING WHEELS

All ULTRAFLEX steering wheels meet the EEC directive 94/25 requirements about pleasure boats.
All steering wheels are CE marked in conformity with the EN 28848 – EN 29775 and ABYC P22 safety standards

- Thermoplastic antishock material
- Standard 3/4'' taper
- Hub included
- Meet with the EN 28848 and ABYC P22 standards

V32B Ø 335 mm (13.8")

V32W Ø 335 mm (13.8")

V32G Ø 335 mm (13.8")

V33B Ø 342 mm (13.8")

V33W Ø 342 mm (13.8")

V33G Ø 342 mm (13.8")

HARD TOUCH GRIP

V32B - 35458 X Black
V32W - 35509 R White
V32G - 39282 H Grey
V33B - 35819 L Black
V33W - 35817 H White
V33G - 37495 J Grey

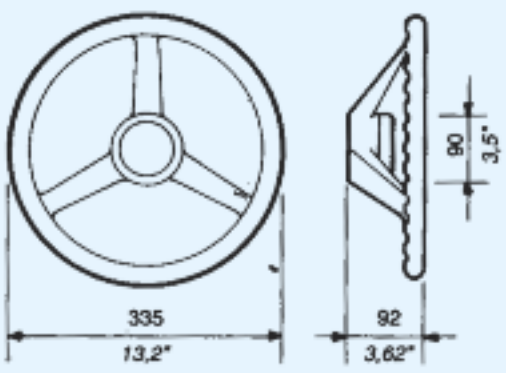

V32

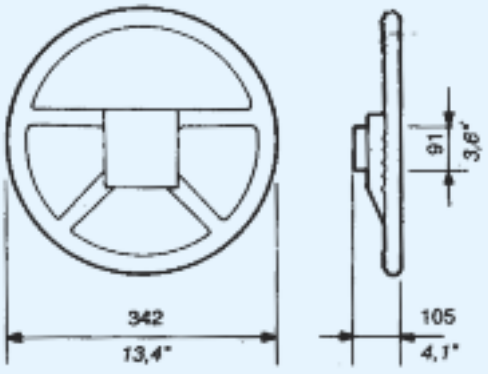

V33

CE

STEERING WHEELS

All ULTRAFLEX steering wheels meet the EEC directive 94/25 requirements about pleasure boats.
All steering wheels are CE marked in conformity with the EN 28848 – EN 29775 and ABYC P22 safety standards

- Thermoplastic antishock material
- Standard 3/4'' taper
- Hub included
- Meet with the EN 28848 and ABYC P22 standards

SOFT TOUCH GRIP REDUCED DIMENSION:

V45B - 37920 H Black
V45W - 38049 P White
V45G - 39291 J Grey

SOFT TOUCH GRIP

V38B - 36517 Q
V38W - 37373 T
V38G/W - 37387 G

V45B Ø 280 mm (13.2")

V45W 280 mm (13.2")

V45G 280 mm (13.2")

V38B Black grip - Black spokes Ø 350 mm (13.8")

V38W White grip - White spokes Ø 350 mm (13.8")

V38G/W Grey grip - White spokes Ø 350 mm (13.8")

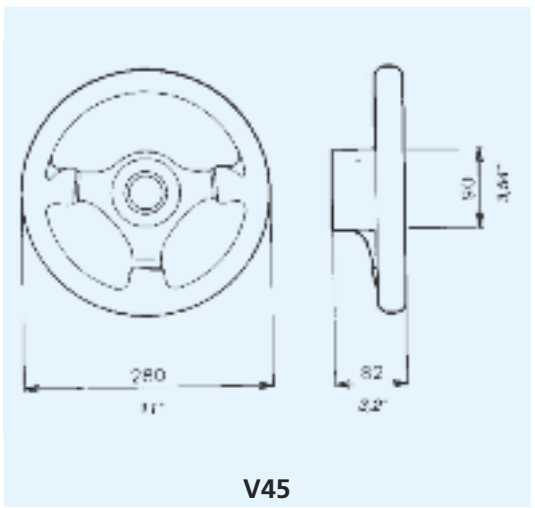

V45

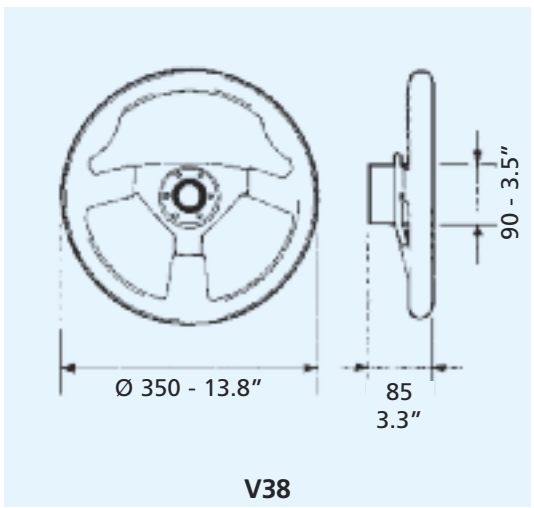

V38

CE

ANTIGUA STEERING WHEELS

All ULTRAFLEX steering wheels meet the EEC directive 94/25 requirements about pleasure boats.
All steering wheels are CE marked in conformity with the EN 28848 – EN 29775 and ABYC P22 safety standards

- Thermoplastic antishock material
- Standard 3/4'' taper
- Hub included
- Meet with the EN 28848 and ABYC P22 standards

SOFT TOUCH GRIP

V60B	- 39189 U
V60W	- 39190 C
V60G	- 39274 J

BURL WOOD GRIP

V61BR	- 39191 E

V60B Black grip - Black spokes
Ø 350 mm (13.8")

V60W White grip - White spokes
Ø 350 mm (13.8")

V60G Grey grip - Grey spokes
Ø 350 mm (13.8")

V61BR Burl wood grip - Black spokes
Ø 350 mm (13.8")

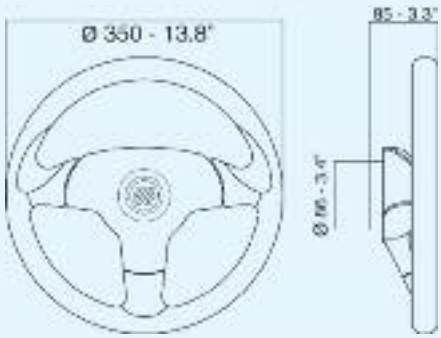

V60 and V61

All Antigua steering wheels are provided with an exclusive hub that easily allows the steering wheel to always be aligned properly.

CE

CORSICA STEERING WHEELS

All ULTRAFLEX steering wheels meet the EEC directive 94/25 requirements about pleasure boats.
All steering wheels are CE marked in conformity with the EN 28848 – EN 29775 and ABYC P22 safety standards

- Standard 3/4'' taper
- Meet with the EN 28848 and ABYC P22 standards
- **X63** - 40119 D hub with button (to be ordered separately)

SOFT TOUCH GRIP

CORSICA B/S - 38333 O
CORSICA B/B - 38332 N
CORSICA W/S - 38334 P
CORSICA G/S - 38393 H

BURL WOOD GRIP

CORSICA BR/B - 38647 T
CORSICA BR/S - 38684 Z

CORSICA B/S Black grip - Silver spokes Ø 350 mm (13.8")

CORSICA B/B Black grip - Black spokes Ø 350 mm (13.8")

CORSICA W/S White grip - Silver spokes Ø 350 mm (13.8")

CORSICA G/S Grey grip - Silver spokes Ø 350 mm (13.8")

CORSICA BR/B Burl wood grip Black spokes - Ø 350 mm (13.8")

CORSICA BR/S Burl wood grip Silver spokes - Ø 350 mm (13.8")

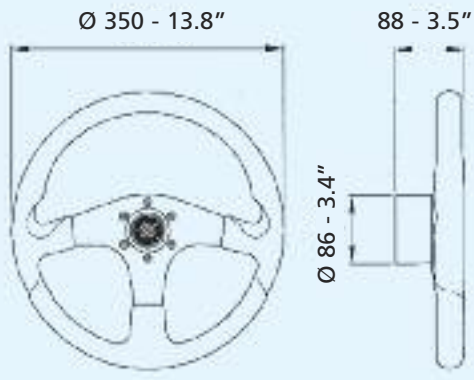

CORSICA

X63

CE

POLYURETHANE STEERING WHEELS

All UFLEX steering wheels meet the EEC directive 94/25 requirements about pleasure boats.
All steering wheels are CE marked in conformity with the EN 28848 – EN 29775 and ABYC P22 safety standards

- Standard 3/4'' taper
- Meet with the EN 28848 and ABYC P22 standards
- **X63** - 40119 D hub with button (to be ordered separately)

POLYURETHANE GRIP

NISIDA B/B - 61812M
NISIDA B/S - 61813 P
PALMARIA B/B - 63727H

POLYURETHANE GRIP WITH INSERTS

SANTORINI B/S - 65995 W
SPARGI S/S - 61984 U

NISIDA B/B Black grip - Black spokes Ø 350 mm (13.8")

NISIDA B/S Black grip - Silver spokes Ø 350 mm (13.8")

PALMARIA B/B Black grip Black spokes - Ø 350 mm (13.8")

SANTORINI B/S Silver inserts - Silver spokes - Ø 350 mm (13.8")

SPARGI S/S Silver inserts Silver spokes - Ø 350 mm (13.8")

CE

POLYURETHANE STEERING WHEELS

All UFLEX steering wheels meet the EEC directive 94/25 requirements about pleasure boats.
All steering wheels are CE marked in conformity with the EN 28848 – EN 29775 and ABYC P22 safety standards

- Standard 3/4'' taper
- Meet with the EN 28848 and ABYC P22 standards
- **X63** - 40119 D hub with button (to be ordered separately)

POLYURETHANE GRIP

PONZA S/S - 61816 W
TAVOLARA B/S - 65277 N
TAVOLARA C/S - 65797 S

POLYURETHANE GRIP WITH INSERTS

LINOSA S/S - 64295 K

PONZA S/S Silver grip
Silver spokes - Ø 350 mm (13.8")

LINOSA S/S Silver inserts
Silver spokes - Ø 350 mm (13.8")

TAVOLARA B/S Black grip
Silver spokes - Ø 350 mm (13.8")

TAVOLARA C/S Cream grip
Silver spokes - Ø 350 mm (13.8")

X63

POLYURETHANE STEERING WHEELS

All UFLEX steering wheels meet the EEC directive 94/25 requirements about pleasure boats.
All steering wheels are CE marked in conformity with the EN 28848 – EN 29775 and ABYC P22 safety standards

- Standard 3/4'' taper
- Meet with the EN 28848 and ABYC P22 standards
- **X63** - 40119 D hub with button (to be ordered separately)

POLYURETHANE GRIP WITH INSERTS

BUDELLI CH/P - 65294 N
BUDELLI CH/S - 65293 L

VIVARA CH/P - 64643 G

POLYURETHANE GRIP AND REDUCED DIMENSION

MYKONOS - 68365 B

BUDELLI CH/P Chrome inserts
Polished spokes - Ø 350 mm (13.8")

BUDELLI CH/S Chrome inserts
Silver spokes - Ø 350 mm (13.8")

VIVARA CH/P Chrome inserts
Polished spokes - Ø 350 mm (13.8")

MYKONOS Black grip
Silver spokes - Ø 320 mm (12.6")

X63

CE

WOOD WHEELS

All UFLEX steering wheels meet the EEC directive 94/25 requirements about pleasure boats.
All steering wheels are CE marked in conformity with the EN 28848 – EN 29775 and ABYC P22 safety standards

- Standard 3/4'' taper
- Meet with the EN 28848 and ABYC P22 standards
- **X63** - 40119 D hub with button (to be ordered separately)

MAHOGANY GRIP

SALINA	- 62799 E
LAMPEDUSA	- 62684 L
ALICUDI	- 62682 G

WOOD GRIP, REDUCED DIMENSION

CAPRI	- 62465 Y

SALINA Ø 360 mm (14.1")

LAMPEDUSA Ø 360 mm (14.1")

ALICUDI Ø 350 mm (13.8")

CAPRI Ø 320 mm (12.6")

CE

NON MAGNETIC STAINLESS STEEL WHEELS

All UFLEX steering wheels meet the EEC directive 94/25 requirements about pleasure boats.
All steering wheels are CE marked in conformity with the EN 28848 – EN 29775 and ABYC P22 safety standards

- Standard 3/4'' taper
- Hub included
- Meet with the EN 28848 and ABYC P22 standards

STAINLESS STEEL GRIP

V21SS - 42121 A

POLYURETHANE "FIRM GRIP"

V21B - 42328 Z
V21W - 42324 R

NATURAL TEAK GRIP

V21TK - 42325 T

STAINLESS STEEL GRIP POLYURETHANE INSERTS

V22 - 42122 C

KNOB21 - 42371 A

V21SS Ø 350 mm (13.8")

V21B Ø 350 mm (13.8")

V21W Ø 350 mm (13.8")

V21TK Ø 350 mm (13.8")

V22 Ø 350 mm (13.8")

KNOB21
Speed knob for V21 and V22 wheels

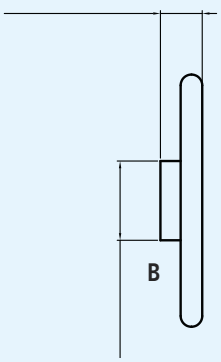

MOD.	B mm (")
V21	64 (2.5)
V22	91 (3.6)

CE

NON MAGNETIC STAINLESS STEEL WHEELS

All ULTRAFLEX steering wheels meet the EEC directive 94/25 requirements about pleasure boats.
All steering wheels are CE marked in conformity with the EN 28848 – EN 29775 and ABYC P22 safety standards

- Standard 3/4'' taper
- Hub included
- Meet with the EN 28848 and ABYC P22 standards

POLYURETHANE GRIP

V25B - 40640 R black
V25W - 40642 V white
V25G - 40641 T grey

V20B - 42843 S black
V20W - 42844 U white
V20G - 42845W grey

MAHOGANY GRIP

V25M - 40644 Z

STAINLESS STEEL GRIP

V25SS - 40643 X

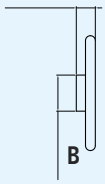

MOD.	B mm (")
V25	57 (2.2)
V20	67 (2.64)

V25B Ø 350 mm (13.8")

V25W Ø 350 mm (13.8")

V25G Ø 350 mm (13.8")

V25M Ø 350 mm (13.8")

V25SS Ø 350 mm (13.8")

V20B Ø 350 mm (13.8")

V20W Ø 350 mm (13.8")

V20G Ø 350 mm (13.8")

CE

NON MAGNETIC STAINLESS STEEL WHEELS

All ULTRAFLEX steering wheels meet the EEC directive 94/25 requirements about pleasure boats.
All steering wheels are CE marked in conformity with the EN 28848 – EN 29775 and ABYC P22 safety standards

- Standard 3/4'' taper
- Hub included
- Meet with the EN 28848 and ABYC P22 standards

POLYURETHANE GRIP

V01B - 41687 Z black
V01W - 41688 B white
V01G - 41689 D grey
V01NB - 41690 M navy blu

NATURAL TEAK GRIP

V01TK - 42120 Y

STAINLESS STEEL GRIP

V01SS - 41692 S

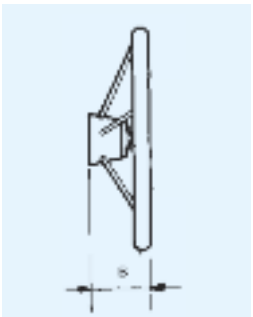

MOD.	B mm (")
V01	67 (2.6)

V01B Ø 350 mm (13.8")

V01W Ø 350 mm (13.8")

V01G Ø 350 mm (13.8")

V01NB Ø 350 mm (13.8")

V01TK Ø 350 mm (13.8")

V01SS Ø 350 mm (13.8")

CE

NON MAGNETIC STAINLESS STEEL WHEELS

All ULTRAFLEX steering wheels meet the EEC directive 94/25 requirements about pleasure boats.
All steering wheels are CE marked in conformity with the EN 28848 – EN 29775 and ABYC P22 safety standards

- Standard 3/4'' taper
- Hub included
- Meet with the EN 28848 and ABYC P22 standards

POLYURETHANE GRIP

V10B- 41693 U black
V10W - 41694 W white
V10G - 41695 Y grey
V10C - 41696 A ochre

POLISHED TEAK GRIP

V10TK 35 - 41697 C
V10TK 40 - 41698 E

STAINLESS STEEL GRIP

V10SS 35- 41699 G
V10SS 40- 41700 M

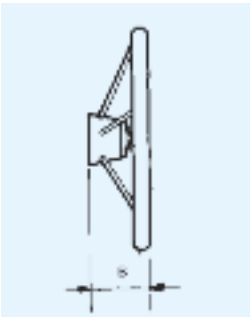

MOD.	B mm (")
V10	67 (2.6)
V10TK 40	73 (2.9)
V10SS 40	73 (2.9)

V10B Ø 350 mm (13.8")

V10W Ø 350 mm (13.8")

V10G Ø 350 mm (13.8")

V10C Ø 350 mm (13.8")

V10TK 35 Ø 350 mm (13.8")
V10TK 40 Ø 400 mm (15.7")

V10SS 35 Ø 350 mm (13.8")
V10SS 40 Ø 400 mm (15.7")

NON MAGNETIC STAINLESS STEEL WHEELS

All ULTRAFLEX steering wheels meet the EEC directive 94/25 requirements about pleasure boats.
All steering wheels are CE marked in conformity with the EN 28848 – EN 29775 and ABYC P22 safety standards

- Standard 3/4'' taper
- Hub included
- Meet with the EN 28848 and ABYC P22 standards 2

POLYURETHANE GRIP AND REDUCED DIMENSION

V28W - 42503 R white
V28B - 42502 N black

V52B - 40631 P black
V52W - 40633 U white
V52G - 40632 S grey

POLYURETHANE GRIP

V57B - 38155 O black
V57W - 38157 Q white
V57G - 38156 P grey

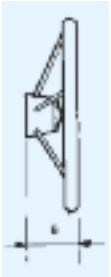

MOD.	B mm (")
V28	65 (2.56)
V52	73 (2.9)
V57	76 (3.0)

CE

V28W Ø 280 mm (11.0")

V28B Ø 280 mm (11.0")

V52B Ø 320 mm (12.6")

V52W Ø 320 mm (12.6")

V52G Ø 320 mm (12.6")

V57B Ø 350 mm (13.8")

V57W Ø 350 mm (13.8")

V57G Ø 350 mm (13.8")

NON MAGNETIC STAINLESS STEEL WHEELS

All ULTRAFLEX steering wheels meet the EEC directive 94/25 requirements about pleasure boats.
All steering wheels are CE marked in conformity with the EN 28848 – EN 29775 and ABYC P22 safety standards

- Standard 3/4'' taper
- Hub included
- Meet with the EN 28848 and ABYC P22 standards

POLYURETHANE GRIP AND REDUCED DIMENSION

V24W - 42347 D
V24B - 42345 Z
V24G - 42346 B
V24C - 42356 E

V24COMMANDO - 42370 Y

V29B - 42846 Y
V29W - 42847 A
V29G - 42848 C

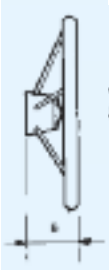

MOD.	B mm (")
V24	75 (2.95)
V29	107 (4.2)

V24W Ø 350 mm (13.8")

V24B Ø 350 mm (13.8")

V24G Ø 350 mm (13.8")

V24C Ø 350 mm (13.8")

V24COMMANDO Ø 350 mm (13.8")

V29B Ø 350 mm (13.8")

V29W Ø 350 mm (13.8")

V29G Ø 350 mm (13.8")

NON MAGNETIC STAINLESS STEEL WHEELS

All ULTRAFLEX steering wheels meet the EEC directive 94/25 requirements about pleasure boats.
All steering wheels are CE marked in conformity with the EN 28848 – EN 29775 and ABYC P22 safety standards

- Standard 3/4'' taper
- Hub included
- Meet with the EN 28848 and ABYC P22 standards

EXCLUSIVE POLYURETHANE "FIRM GRIP"

V70B - 39442 D black
V70W - 39929 J white
V70G - 39441 B grey

POLYURETHANE GRIP

V58G - 38650 F grey
V53B - 40634 W black
V53G - 40635 Y grey

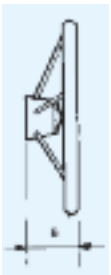

MOD.	B mm (")
V53	56 (2.2)
V58	78 (3.0)
V70	90 (3.5)

V70B Ø 350 mm (13.8")

V70W Ø 350 mm (13.8")

V70G Ø 350 mm (13.8")

V58G Ø 400 mm (15.7")

V53B Ø 450 mm (17.7")

V53G Ø 450 mm (17.7")

CE

NON MAGNETIC STAINLESS STEEL WHEELS

All ULTRAFLEX steering wheels meet the EEC directive 94/25 requirements about pleasure boats.
All steering wheels are CE marked in conformity with the EN 28848 – EN 29775 and ABYC P22 safety standards

- Standard 3/4'' taper
- Hub included
- Meet with the EN 28848 and ABYC P22 standards

MAHOGANY GRIP

V30 - 42418 A
V62 - 39263 D
V66 - 39424 B
V80 - 41683 R

NATURAL OAK GRIP

V82 - 41685 V

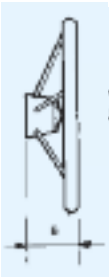

MOD.	B mm (")
V30	99 (3.9)
V62	104 (4.1)
V66	80 (3.1)
V80	70 (2.8)
V82	70 (2.8)

V30 Ø 350 mm (13.8")

V62 Ø 350 mm (13.8")

V66 Ø 350 mm (13.8")

V80 Ø 350 mm (13.8")

V82 Ø 350 mm (13.8")

NON MAGNETIC STAINLESS STEEL WHEELS

All ULTRAFLEX steering wheels meet the EEC directive 94/25 requirements about pleasure boats.
All steering wheels are CE marked in conformity with the EN 28848 – EN 29775 and ABYC P22 safety standards

- Standard 3/4'' taper
- Hub included
- Meet with the EN 28848 and ABYC P22 standards

MAHOGANY GRIP

V63 - 39264 F
V67 - 39425 D

KNOB67 - 40677 R

V74/40- 41115 A
V74/45- 41116 C
V74/50- 41117 E

NATURAL TEAK GRIP

V77/40- 41152 G
V77/45- 41153 J
V77/50- 41154 L

POLISHED TEAK GRIP

V84 - 42415 U
V85 - 42416 W
V86 - 42417 Y

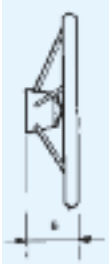

MOD.	B mm (")
V63	108 (4.3)
V67	100 (3.9)
V74	63 (2.5)
V77	63 (2.5)
V84	69 (2.7)
V85	69 (2.7)
V86	69 (2.7)

CE

V67 Ø 400 mm (15.7") - V63 Ø 450 mm (17.7")

KNOB67
Speed knob for V63 and V67 wheels

V74/40 Ø 400 mm (15.7")
V74/45 Ø 450 mm (17.7") - V74/50 Ø 500 mm (19.6")

V77/40 Ø 400 mm (15.7")
V77/45 Ø 450 mm (17.7") - V77/50 Ø 500 mm (19.6")

V84 Ø 500 mm (19.6")

V85 Ø 500 mm (19.6")

V86 Ø 700 mm (27.6")

NON MAGNETIC STAINLESS STEEL WHEELS

All ULTRAFLEX steering wheels meet the EEC directive 94/25 requirements about pleasure boats.
All steering wheels are CE marked in conformity with the EN 28848 – EN 29775 and ABYC P22 safety standards

- Standard 3/4'' taper
- Hub included
- Meet with the EN 28848 and ABYC P22 standards

STAINLESS STEEL GRIP

V23 - 32397 D
V35 - 31602 H
V65 - 39436 J

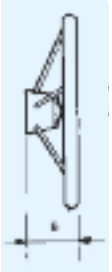

MOD.	B mm (")
V23	110 (4.3)
V35	100 (3.9)
V65	73 (2.9)

CAPTAIN'S WHEELS

V89 - 40721 R

V90/37 - 39931 V
V90/42 - 39932 X
V90/49 - 39933 Z

V93 - 40645 B
KNOB93 - 40647 F

V35 Ø 345 mm (13.6") - V23 Ø 400 mm (15.7")

V65 Ø 370 mm (14.5")

V89 Ø 500 mm (19.6")

V90/37 Ø 370 mm (14.5") - V90/42 Ø 420 mm (16.5")
V90/49 Ø 490 mm (19.3")

V93 Ø 460 mm (18.1")

KNOB93
Folding knob
for V93 wheels

SIESTA KEY 2 SPOKE NON MAGNETIC STAINLESS STEEL WHEELS

All ULTRAFLEX steering wheels meet the EEC directive 94/25 requirements about pleasure boats.
All steering wheels are CE marked in conformity with the EN 28848 – EN 29775 and ABYC P22 safety standards

- Standard 3/4'' taper
- Hub included
- Meet with the EN 28848 and ABYC P22 standards

STAINLESS STEEL GRIP

SIESTAKEY/B - 68188 F
SIESTAKEY/W - 68189 H
SIESTAKEY/G - 68203 Y

KNOB/SK - 68832 G

SIESTAKEY/B Ø 368 mm (14.5")

SIESTAKEY/G Ø 368 mm (14.5")

SIESTAKEY/W Ø 368 mm (14.5")

KNOB/SK - Speed knob for Siestakey

CE

"VERO VOLANTE ITALIANO"

IS THE REGISTERED TRADEMARK WHICH DISTINGUISHES THE STEERING WHEELS FOR PLEASURE BOATS PRODUCED BY ULTRAFLEX

VERO VOLANTE ITALIANO

BOCCANEGRA STEERING WHEELS

"VERO VOLANTE ITALIANO" is the registered trademark which distinguishes the steering wheels for pleasure boats produced by Ultraflex. They are conceived by Italian designers, engineered and manufactured in Italy by employing genuine Italian components and technologies according to Ultraflex quality management system.

- Standard 3/4'' taper
- Hub included
- Meet with the EN 28848 and ABYC P22 standards

LEATHER GRIP AND HUB

BOCCANEGRA W - 67295 B white

LEATHER GRIP PAINTED HUB

BOCCANEGRA SB - 67296 D sky-blue

Boccanegra W - Ø 350 mm (13.8")

Boccanegra SB - Ø 350 mm (13.8")

CHRISTIAN GRANDE

All ULTRAFLEX steering wheels meet the EEC directive 94/25 requirements about pleasure boats.
All steering wheels are CE marked in conformity with the EN 28848 – EN 29775 and ABYC P22 safety standards

VERO VOLANTE ITALIANO

BOCCANEGRA STEERING WHEELS

"VERO VOLANTE ITALIANO" is the registered trademark which distinguishes the steering wheels for pleasure boats produced by Ultraflex. They are conceived by Italian designers, engineered and manufactured in Italy by employing genuine Italian components and technologies according to Ultraflex quality management system.

- Standard 3/4'' taper
- Hub included
- Meet with the EN 28848 and ABYC P22 standards

LEATHER GRIP AND HUB

BOCCANEGRA B - 67460 P
black

CHRISTIAN GRANDE
DesignWorks

Boccanegra B - Ø 350 mm (13.8")

All ULTRAFLEX steering wheels meet the EEC directive 94/25 requirements about pleasure boats.
All steering wheels are CE marked in conformity with the EN 28848 – EN 29775 and ABYC P22 safety standards

VERO VOLANTE ITALIANO

MOROSINI STEERING WHEELS

"VERO VOLANTE ITALIANO" is the registered trademark which distinguishes the steering wheels for pleasure boats produced by Ultraflex. They are conceived by Italian designers, engineered and manufactured in Italy by employing genuine Italian components and technologies according to Ultraflex quality management system.

- Standard 3/4'' taper
- Hub included
- Meet with the EN 28848 and ABYC P22 standards

LEATHER GRIP AND HUB

MOROSINI SEA - 67301 T

CHRISTIAN GRANDE

Morosini Sea - Ø 350 mm (13.8")

CE

All ULTRAFLEX steering wheels meet the EEC directive 94/25 requirements about pleasure boats.
All steering wheels are CE marked in conformity with the EN 28848 – EN 29775 and ABYC P22 safety standards

VERO VOLANTE ITALIANO

MOROSINI STEERING WHEELS

"VERO VOLANTE ITALIANO" is the registered trademark which distinguishes the steering wheels for pleasure boats produced by Ultraflex. They are conceived by Italian designers, engineered and manufactured in Italy by employing genuine Italian components and technologies according to Ultraflex quality management system.

- Standard 3/4'' taper
- Hub included
- Meet with the EN 28848 and ABYC P22 standards

LEATHER GRIP, CHROME HUB

MOROSINI B/CH - 67297 F
MOROSINI G/CH - 67300 R

POLYURETHANE GRIP, CHROME HUB

MOROSINI PU B/CH - 67461 S

CHRISTIANGRANDE DesignWorks

Morosini B/CH - Ø 350 mm (13.8")

Morosini G/CH - Ø 350 mm (13.8")

All ULTRAFLEX steering wheels meet the EEC directive 94/25 requirements about pleasure boats.
All steering wheels are CE marked in conformity with the EN 28848 – EN 29775 and ABYC P22 safety standards

VERO VOLANTE ITALIANO

MOROSINI STEERING WHEELS

"VERO VOLANTE ITALIANO" is the registered trademark which distinguishes the steering wheels for pleasure boats produced by Ultraflex. They are conceived by Italian designers, engineered and manufactured in Italy by employing genuine Italian components and technologies according to Ultraflex quality management system.

- Standard 3/4'' taper
- Hub included
- Meet with the EN 28848 and ABYC P22 standards

LEATHER GRIP, PAINTED HUB

MOROSINI W	- 67298 H
MOROSINI C	- 67299 K

CHRISTIAN GRANDE

Morosini W - Ø 350 mm (13.8")

Morosini C - Ø 350 mm (13.8")

All ULTRAFLEX steering wheels meet the EEC directive 94/25 requirements about pleasure boats.
All steering wheels are CE marked in conformity with the EN 28848 – EN 29775 and ABYC P22 safety standards

VERO VOLANTE ITALIANO

MOROSINI STEERING WHEELS

"VERO VOLANTE ITALIANO" is the registered trademark which distinguishes the steering wheels for pleasure boats produced by Ultraflex. They are conceived by Italian designers, engineered and manufactured in Italy by employing genuine Italian components and technologies according to Ultraflex quality management system.

- Standard 3/4'' taper
- Hub included
- Meet with the EN 28848 and ABYC P22 standards

MOHOGANY GRIP

MOROSINI M - 68054 H

CHRISTIANGRANDE DesignWorks

Morosini M - Ø 350 mm (13.8")

All ULTRAFLEX steering wheels meet the EEC directive 94/25 requirements about pleasure boats.
All steering wheels are CE marked in conformity with the EN 28848 – EN 29775 and ABYC P22 safety standards

VERO VOLANTE ITALIANO

FOSCARI STEERING WHEELS

"VERO VOLANTE ITALIANO" is the registered trademark which distinguishes the steering wheels for pleasure boats produced by Ultraflex. They are conceived by Italian designers, engineered and manufactured in Italy by employing genuine Italian components and technologies according to Ultraflex quality management system.

- Standard 3/4'' taper
- Hub included
- Meet with the EN 28848 and ABYC P22 standards

POLYURETHANE GRIP

FOSCARI B - 67303 X

SKY GRIP

FOSCARI L - 67305 B

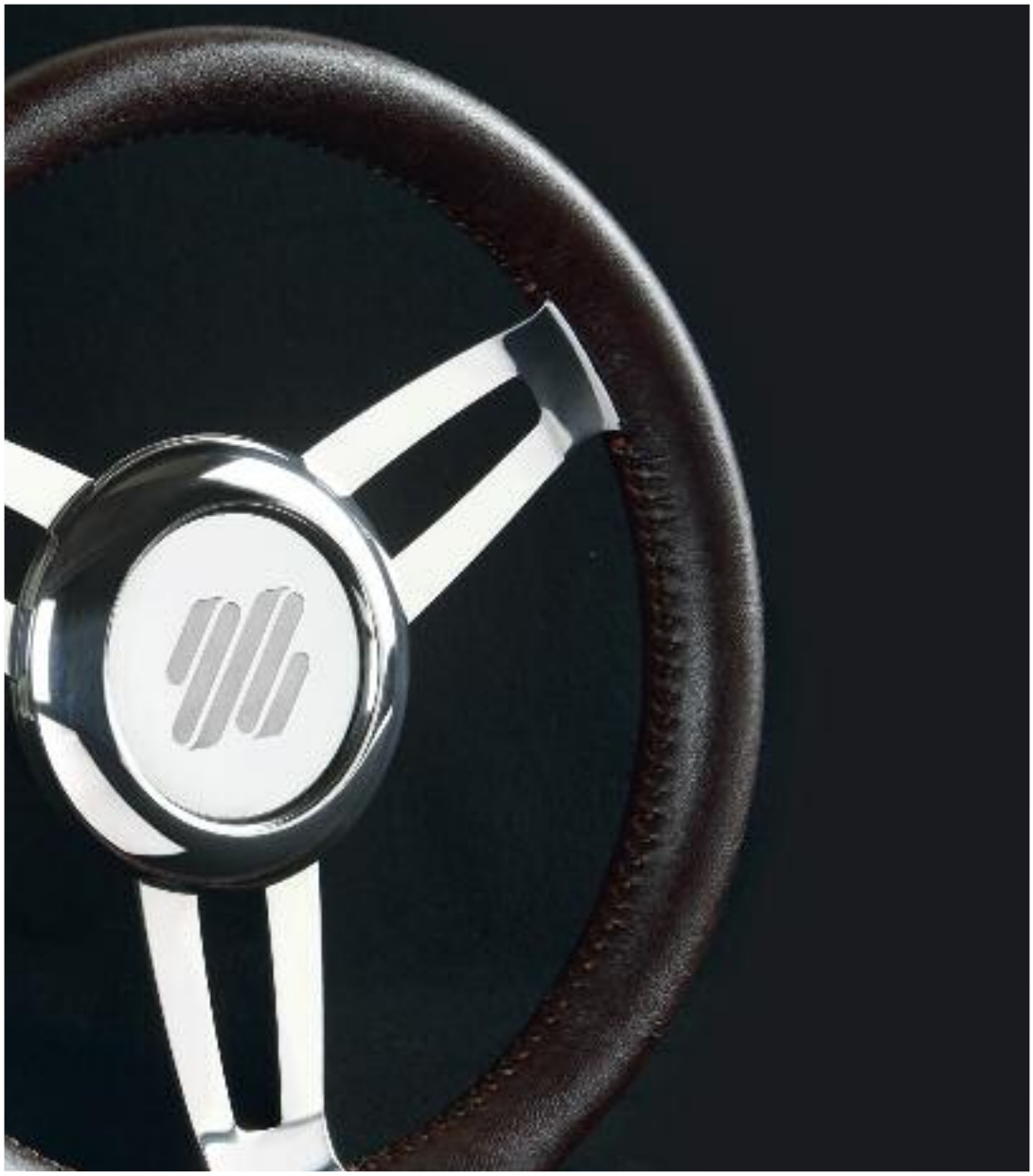

CHRISTIAN GRANDE

Foscari B - Ø 350 mm (13.8")

Foscari L - Ø 350 mm (13.8")

CE

All ULTRAFLEX steering wheels meet the EEC directive 94/25 requirements about pleasure boats.
All steering wheels are CE marked in conformity with the EN 28848 – EN 29775 and ABYC P22 safety standards

VERO VOLANTE ITALIANO

FOSCARI STEERING WHEELS

"VERO VOLANTE ITALIANO" is the registered trademark which distinguishes the steering wheels for pleasure boats produced by Ultraflex. They are conceived by Italian designers, engineered and manufactured in Italy by employing genuine Italian components and technologies according to Ultraflex quality management system.

- Standard 3/4'' taper
- Hub included
- Meet with the EN 28848 and ABYC P22 standards

POLYURETHANE GRIP

FOSCARI W	- 67302 V
FOSCARI C	- 67304 Z

CHRISTIANGRANDE DesignWorks

Foscari W - Ø 350 mm (13.8")

Foscari C - Ø 350 mm (13.8")

All ULTRAFLEX steering wheels meet the EEC directive 94/25 requirements about pleasure boats.
All steering wheels are CE marked in conformity with the EN 28848 – EN 29775 and ABYC P22 safety standards

VERO VOLANTE ITALIANO

ADORNO STEERING WHEELS

"VERO VOLANTE ITALIANO" is the registered trademark which distinguishes the steering wheels for pleasure boats produced by Ultraflex. They are conceived by Italian designers, engineered and manufactured in Italy by employing genuine Italian components and technologies according to Ultraflex quality management system.

- Standard 3/4'' taper
- Hub included
- Meet with the EN 28848 and ABYC P22 standards

LEATHER GRIP

ADORNO B/BCH - 69169 G
ADORNO B/BB - 69170 R

POLYURETHANE GRIP

ADORNO PU B/BCH - 69167 C
ADORNO PU B/BB - 69168 E

Adorno B/BCH - Ø 350 mm (13.8")

Adorno B/BB - Ø 350 mm (13.8")

CE

All ULTRAFLEX steering wheels meet the EEC directive 94/25 requirements about pleasure boats.
All steering wheels are CE marked in conformity with the EN 28848 – EN 29775 and ABYC P22 safety standards

VERO VOLANTE ITALIANO

CONTARINI STEERING WHEEL

"VERO VOLANTE ITALIANO" is the registered trademark which distinguishes the steering wheels for pleasure boats produced by Ultraflex. They are conceived by Italian designers, engineered and manufactured in Italy by employing genuine Italian components and technologies according to Ultraflex quality management system.

- Standard 3/4'' taper
- Hub included
- Meets with the EN 28848 and ABYC P22 standards

POLYURETHANE GRIP

CONTARINI PUB - 69199 S

Contarini PUB - Ø 350 mm (13.8")

All ULTRAFLEX steering wheels meet the EEC directive 94/25 requirements about pleasure boats.
All steering wheels are CE marked in conformity with the EN 28848 – EN 29775 and ABYC P22 safety standards

VERO VOLANTE ITALIANO

BALBI STEERING WHEEL

"VERO VOLANTE ITALIANO" is the registered trademark which distinguishes the steering wheels for pleasure boats produced by Ultraflex. They are conceived by Italian designers, engineered and manufactured in Italy by employing genuine Italian components and technologies according to Ultraflex quality management system.

- Standard 3/4'' taper
- Hub included
- Meets with the EN 28848 and ABYC P22 standards

POLYURETHANE GRIP

BALBI	- 68833 J

Balbi - Ø 350 mm (13.8")

All ULTRAFLEX steering wheels meet the EEC directive 94/25 requirements about pleasure boats.
All steering wheels are CE marked in conformity with the EN 28848 – EN 29775 and ABYC P22 safety standards

VERO VOLANTE ITALIANO

VENIER STEERING WHEEL

"VERO VOLANTE ITALIANO" is the registered trademark which distinguishes the steering wheels for pleasure boats produced by Ultraflex. They are conceived by Italian designers, engineered and manufactured in Italy by employing genuine Italian components and technologies according to Ultraflex quality management system.

- Standard 3/4'' taper
- Hub included
- Meets with the EN 28848 and ABYC P22 standards

NATURAL TEAK GRIP

VENIER TK	- 69193 D

Venier - Ø 350 mm (13.8")

All ULTRAFLEX steering wheels meet the EEC directive 94/25 requirements about pleasure boats.
All steering wheels are CE marked in conformity with the EN 28848 – EN 29775 and ABYC P22 safety standards

VERO VOLANTE ITALIANO

MANIN STEERING WHEELS

"VERO VOLANTE ITALIANO" is the registered trademark which distinguishes the steering wheels for pleasure boats produced by Ultraflex. They are conceived by Italian designers, engineered and manufactured in Italy by employing genuine Italian components and technologies according to Ultraflex quality management system.

- Standard 3/4'' taper
- Hub included
- Meet with the EN 28848 and ABYC P22 standards

POLYURETHANE GRIP STAINLESS STEEL SPOKES

MANIN B/P - 68204 A

POLYURETHANE GRIP ALUMINUM SPOKES

MANIN B/S - 68205 C
MANIN B/B - 68206 E

Manin B/P - Ø 350 mm (13.8")

Manin B/B - Ø 350 mm (13.8")

Manin B/S - Ø 350 mm (13.8")

CE

All ULTRAFLEX steering wheels meet the EEC directive 94/25 requirements about pleasure boats.
All steering wheels are CE marked in conformity with the EN 28848 – EN 29775 and ABYC P22 safety standards

VERO VOLANTE ITALIANO

GRIMANI STEERING WHEELS

"VERO VOLANTE ITALIANO" is the registered trademark which distinguishes the steering wheels for pleasure boats produced by Ultraflex. They are conceived by Italian designers, engineered and manufactured in Italy by employing genuine Italian components and technologies according to Ultraflex quality management system.

- Standard 3/4'' taper
- Hub included
- Meet with the EN 28848 and ABYC P22 standards

POLYURETHANE GRIP WITH INSERTS

GRIMANI B/P/CH - 69198 P
GRIMANI B/S/VE - 69297 S
GRIMANI B/B/CH - 69298 U

Grimani B/S/VE - Ø 350 mm (13.8")

Grimani B/P/CH - Ø 350 mm (13.8")

Grimani B/B/CH - Ø 350 mm (13.8")

CE

All ULTRAFLEX steering wheels meet the EEC directive 94/25 requirements about pleasure boats.
All steering wheels are CE marked in conformity with the EN 28848 – EN 29775 and ABYC P22 safety standards

VERO VOLANTE ITALIANO

DORIA STEERING WHEELS

"VERO VOLANTE ITALIANO" is the registered trademark which distinguishes the steering wheels for pleasure boats produced by Ultraflex. They are conceived by Italian designers, engineered and manufactured in Italy by employing genuine Italian components and technologies according to Ultraflex quality management system.

- Standard 3/4'' taper
- Hub included
- Meet with the EN 28848 and ABYC P22 standards

POLYURETHANE GRIP WITH INSERTS

DORIA B/R - 67309 K
DORIA B/B - 67465 A
DORIA W/W - 67728 G

Doria B/R - Ø 350 mm (13.8")

Doria B/B - Ø 350 mm (13.8")

Doria W/W - Ø 350 mm (13.8")

CE

All ULTRAFLEX steering wheels meet the EEC directive 94/25 requirements about pleasure boats.
All steering wheels are CE marked in conformity with the EN 28848 – EN 29775 and ABYC P22 safety standards

VERO VOLANTE ITALIANO

PADDLE TRIM

For complete control of engine trim and tilt, trim tabs, jackplates, PowerPole(R) and other on board systems, the innovative Paddle Trim system is the answer.
Adaptable to existing front mount hydraulic and tilt helms, the Paddle Trim is ergonomically designed to allow the driver to make precise adjustments to the attitude of the boat or other systems without removing his hand from the steering wheel.

Single or dual

Adjustable positioning

Tilt or front mount

FEATURES

- Available both in single and dual versions (for either two equal or two different outputs).
- Both single or dual paddle can be positioned at various angles for the most confortable choice.
- Equipped with one water proof "MOM.ON-OFF-MOM.ON switch (2 switches on dual version).
- Max load 5 Amp @ 12VDC.
- For loads exceeding 5 Amp we recommend the use of the **KTR** - 42860S kit relay.
- Uflex® trim tabs require the use of the **KTR** - 42860S kit relay.
- Suitable for any kind of steering wheel dish. Max wheel dia. 400 mm (15.7").
- Easy to install on the following Ultraflex® steering systems:
  - front and tilt mount hydraulic helms
  - tilt mount mechanical helms
- Wiring harness, labels and mounting hardware kit are included. The mounting plate, which differs between front and tilt mount. Installation, is ordered separately.

PADDLE TRIM LABELS

	ENGINE TRIM & TILT	JACKPLATE	TRIM TABS	HORN
UP	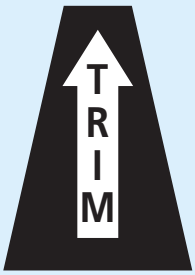	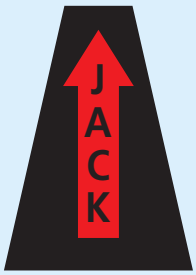	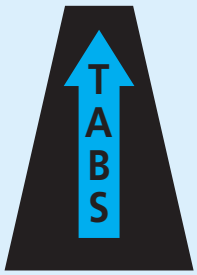	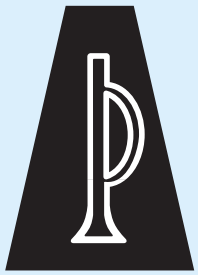
DOWN	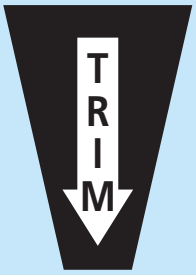	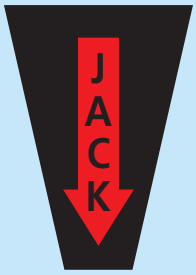	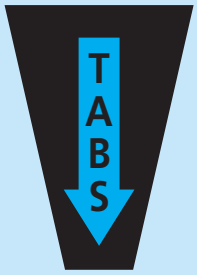	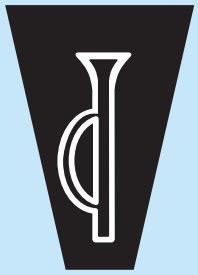

ORDER GUIDE

DESCRIPTION	P. No	SINGLE Q.TY	DUAL Q.TY
- Single function control device	42857D	1	2
- Mounting plate for tilt mount helms (mech or hydraulic)	42858F	1	1
or:			
- Mounting plate for front mount hydraulic helms	42859H	1	1
- **KTR** kit relay for loads exceeding 5 Amp	42860S	1	2

SINGLE LEVER SIDE MOUNT CONTROLS

Featuring AISI 316 stainless steel lever and bezel, the B400 has a sleek and modern design which is ideal for sailboats.

The B400 has an universal control mechanism that allows for both "push" or "pull" for throttle and shift, push button warm up, and will accept 33C style cables, as well as BRP®, Mercury® Gen I and Gen II cables with optional adapters.

Available in mechanical version or hybrid version (patented) to control the shift by a mechanical cable and the throttle via 0-5V electric signal.

FEATURES

- 316 stainless steel lever and flange for a better resistance in the marine environment
- Enables easy and safe shifting by preventing accidental gear engagement unless engine is idling
- Can be installed horizontally or vertically, on the starboard or port side of the boat
- Provided with a brake tension release system easily adjustable
- Push-in button for throttle operation in Neutral (ENGINE WARM UP).
- Neutral safety switch **X41** - 38130 F included prevents in-gear starting
- Exceeds EN ISO 11547 standards when **X41** safety switch is installed
- The B400 **ETC** (Electronic Throttle Control) version is available on request. The sensor has an analog output signal which can be single or redundant. The output voltage range is chosen by the customer between 0 and 5V. Power supply 5V +/- 10%, linearity +/- 1%.
  For ETC controls please contact our Technical Service for custom configuration.

- For use with Ultraflex C2, C8, MACHZero control cables (no kit required)

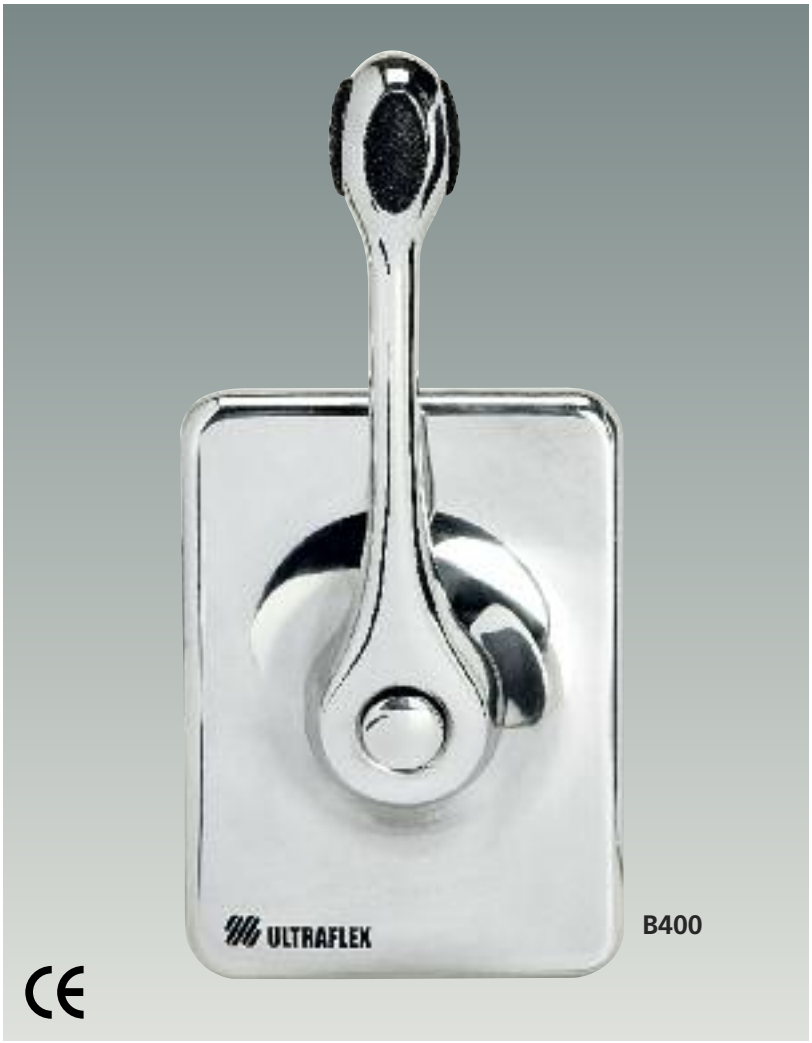

MODELS

B400 - 42076 Y Fully mechanical version

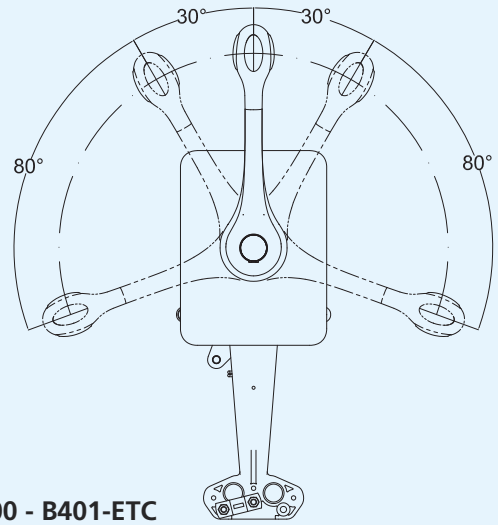

B400 - B401-ETC

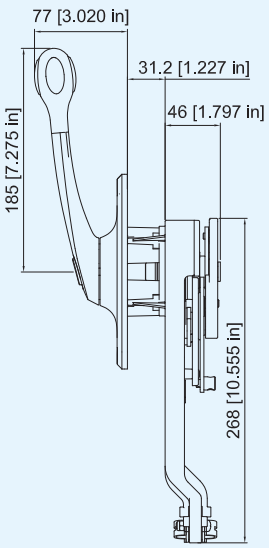

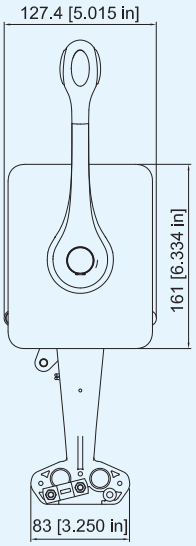

SINGLE LEVER SIDE MOUNT CONTROLS

The new B310 controls combine elegance, functionality and versatility.
Available with chrome, burl or soft touch control levers, the B310 series can be used on outboards, sterndrives and inboard applications.
The universal control design allows for the connection of 33C Universal style cable and OMC (Johnson/Evinrude) cables with adapters included.
Mercury Gen I cables can be easily connected with the addition of the K35 connection kit.

FEATURES

- Enables easy and safe shifting by preventing accidental gear engagement unless engine is idling
- Can be installed horizontally or vertically, on the starboard or port side of the boat
- Provided with a brake tension release system adjustable from outside
- Pull-out handle disengages shift for warm-up
- Includes **X50** neutral safety switch which prevents in-gear starting
- Exceeds EN ISO 11547 standards when X50 safety switch is installed
- All models are provided with positive lock-in neutral to prevent accidental gear engagement
- All models are provided with a power trim switch conveniently located in the handle grip that enables an easy tilting of the engine
- For use with:
  - All Ultraflex control cables except C4, C36 and MACH36
  - Mercury®\ current BRP® (OMC®) \ Yamaha® \ Suzuki® Honda® \ Volvo® style cables
  - 33C style cables
- Ultraflex C5, C16, MACH5 and Mercury® cables require **K35** - 34730 U connection kit
  Ultraflex C22 cables require
  KB1 - 39964 L connection kit

MODELS

B310CH - 41789 H - Provided with a positive lock-in neutral and trim switch

B310BR - 41788 F - Provided with a positive lock-in neutral and trim switch

B310B - 41790 S - Provided with a positive lock-in neutral and trim switch

B310B-NT - 42628 M - Provided with a positive lock-in neutral and without trim switch

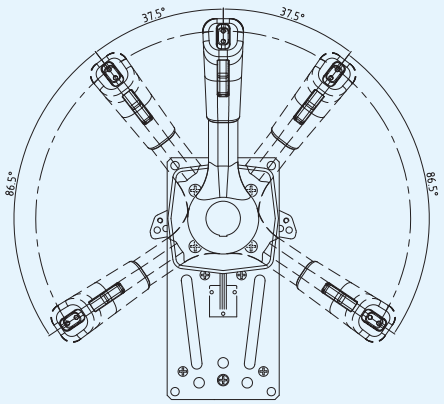

B310CH - B310BR - B310B

B310CH

B310BR

B310B

B310B-NT No Trim

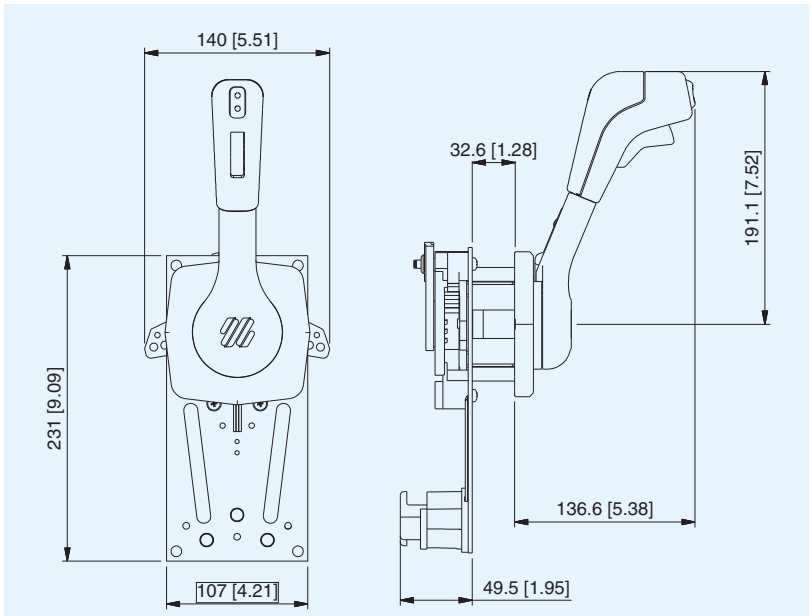

B310CH - B310BR - B310B

SINGLE LEVER SIDE MOUNT CONTROLS

Single lever / dual action control to operate both throttle and shift.
Suitable for any type of boats with outboard, inboard or I/O power plants.

FEATURES

- Enables easy and safe shifting by preventing accidental gear engagement unless engine is idling
- Can be installed horizontally or vertically, on the starboard or port side of the boat
- Provided with a brake tension release system adjustable from outside
- Pull-out handle disengages shift for warm-up
- Neutral safety switch **X12** - 34543 Q (optional) prevents in-gear starting
- Exceeds EN ISO 11547 standards when X12 safety switch is installed
- All models are provided with positive lock-in neutral to prevent accidental gear engagement
- B184 model is provided with a power trim switch conveniently located in the handle grip that enables an easy tilting of the engine
- For use with all Ultraflex engine control cables except C4 (discontinued) , C22, C36 and MACH36.
- Ultraflex C5, C16 and MACH5 cables require **K35** - 34730 U connection kit

B183

B184

B85

MODELS

B183 - 38945 B
Provided with a positive lock-in neutral

B184 - 38946 D
Provided with a positive lock-in neutral and trim switch

B85 - 35682 I
Standard model, smooth design for use on sailboats. Provided with a positive lock-in neutral

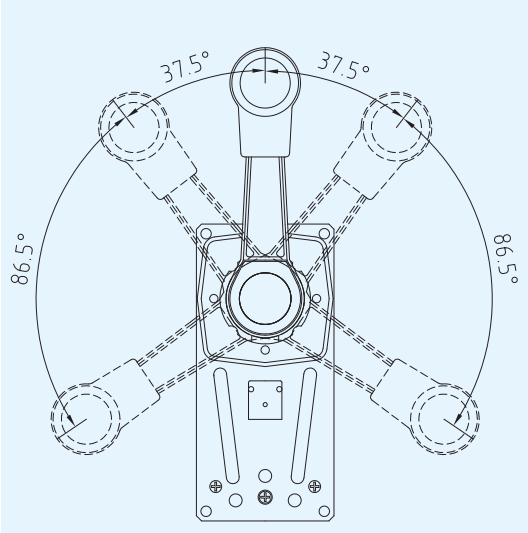

B85 - B183 - B184

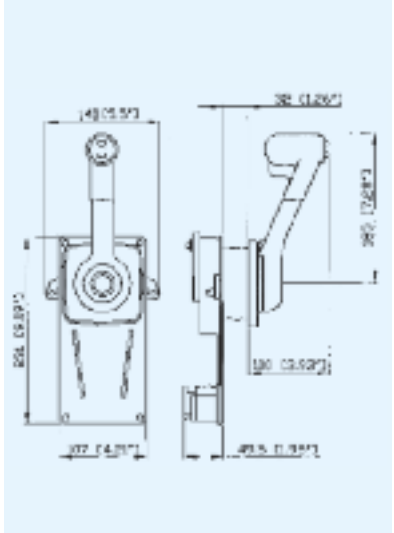

B183 - B184

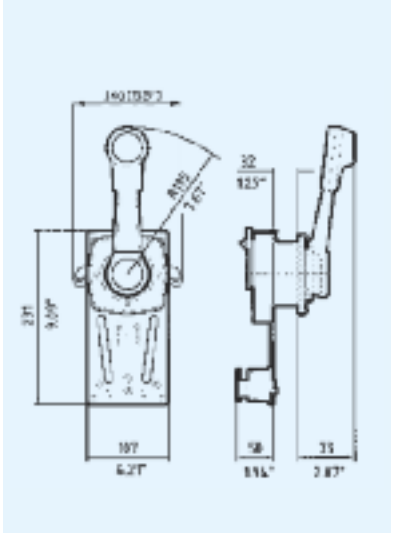

B85

SINGLE LEVER SIDE MOUNT CONTROLS

Single lever / dual action control to operate both throttle and shift.
Suitable for any type of boats with outboard, inboard or I/O power plants.

FEATURES

- Enables easy and safe shifting by preventing accidental gear engagement unless engine is idling
- Can be installed horizontally or vertically, on the starboard or port side of the boat
- Made of painted marine aluminum
- Pull-out handle disengages shift for warm-up
- Neutral safety switch **X12** - 34543 Q (optional) prevents in-gear starting
- Exceeds EN ISO 11547 standards when X12 safety switch is installed
- Provided with a positive lock-in neutral to prevent accidental gear engagement
- For use with all Ultraflex engine control cables except C4 (discontinued), C22, C36 and MACH36.
- Ultraflex C5, C16 and MACH5 cables require **K35** - 34730 U connection kit.
- To connect C14 and MACH14 cables to engine, use **K51** - 32526 N connection kit.

MODELS

B89 - 36151 G
Ivory finish with positive lock-in neutral.

B90 - 36152 H
Black finish with positive lock-in neutral.

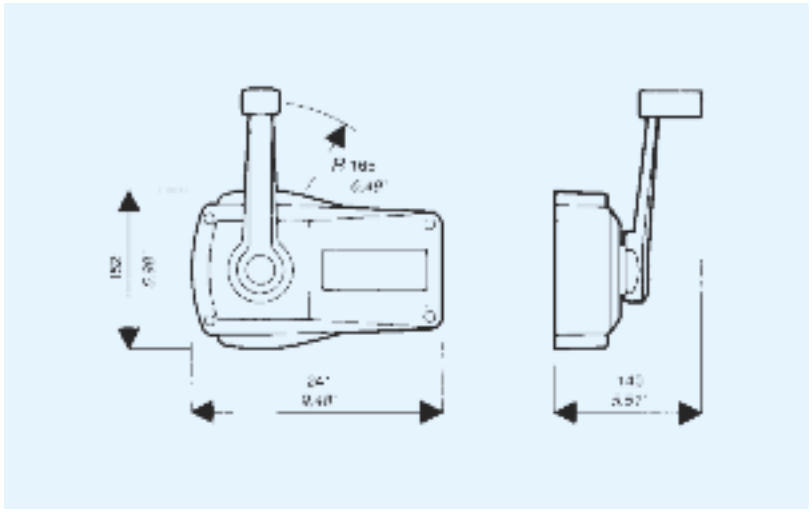

"LOW PROFILE" SINGLE LEVER TOP MOUNT CONTROLS

B301CR

B302CR

Single lever / dual action control to operate both with throttle and shift.
Suitable for any type of boats with outboard, inboard or I/O power plants.

FEATURES

- Compact single lever controls offering a unique low profile style compared to other controls available on the market
- Enables easy and safe shifting by preventing accidental gear engagement unless engine is idling
- Made of marine aluminum, chrome plated or powder coat finish
- Push in button disengages shift for warm-up
- Neutral safety switch **X12** - 34543 Q (optional) prevents in-gear starting
- Exceeds EN ISO 11547 standards when X12 safety switch is installed
- For use with all Ultraflex control cables except C4 (discontinued):
  - C14 and MACH14 cables require no kit
  - for C2, C8 and MACHZero cables the connection kit **K59** - 40144 C is included
  - C5, C16 and MACH5 cables require **K60** Kit - 40145 E
  - C36 and MACH36 cables require **K62** Kit - 40157 J
  - C22 cable requires **K61** Kit - 40146 G

2 X75 (OPTIONAL)

B302CR + 2 X75

MODELS

B301CR - 40140 U
Single lever control for one engine, chrome plated.

B302CR - 40141 W
Twin lever control for two engines, chrome plated.

X75 - 40662 B
Silver knob **optional**

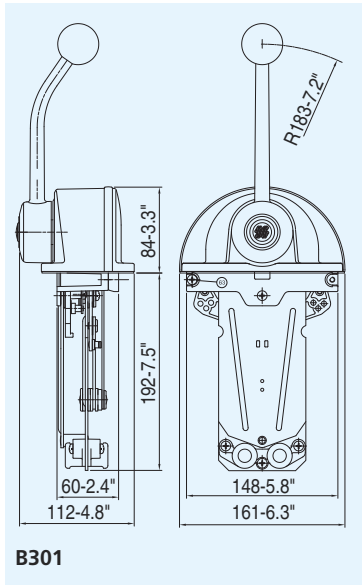

B301

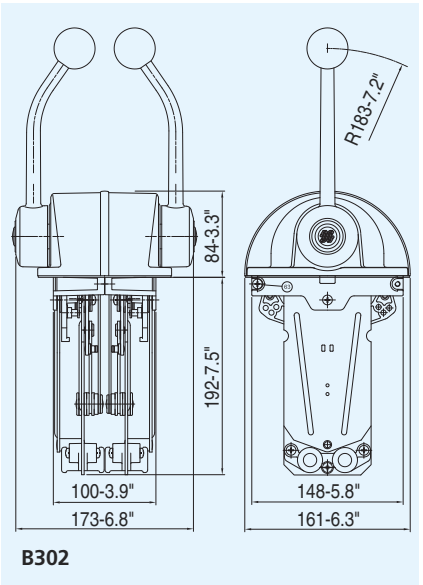

B302

"LOW PROFILE" SINGLE LEVER TOP MOUNT CONTROLS

B301B

B302B

Single lever / dual action control to operate both with throttle and shift.
Suitable for any type of boats with outboard, inboard or I/O power plants.

FEATURES

- Compact single lever controls offering a unique low profile style compared to other controls available on the market
- Enables easy and safe shifting by preventing accidental gear engagement unless engine is idling
- Made of marine aluminum, chrome plated or powder coat finish
- Push in button disengages shift for warm-up
- Neutral safety switch **X12** - 34543 Q (optional) prevents in-gear starting
- Exceeds EN ISO 11547 standards when X12 safety switch is installed
- For use with all Ultraflex control cables except C4 (discontinued):
  - C14 and MACH14 cables require no kit
  - for C2, C8 and MACHZero cables the connection kit is **K59** - 40144 C included
  - C5, C16 and MACH5 cables require **K60** Kit - 40145 E
  - C36 and MACH36 cables require **K62** Kit - 40157 J
  - C22 cable requires **K61** Kit - 40146 G

2 X75 (OPTIONAL)

B302B + 2 X75

MODELS

B301B - 40142 Y
Single lever control for one engine, black dome, chrome plated lever.

B302B - 40143 A
Twin lever control for two engines, black dome, chrome plated lever.

X75 - 40662 B
Silver knob **optional**

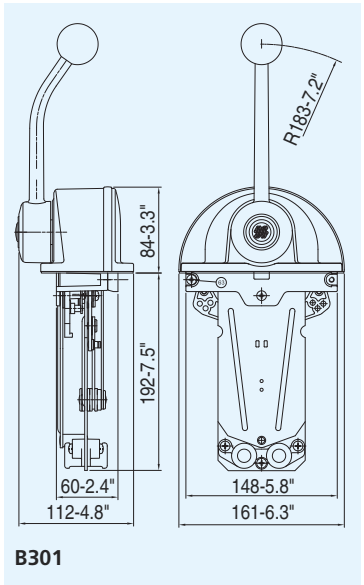

B301

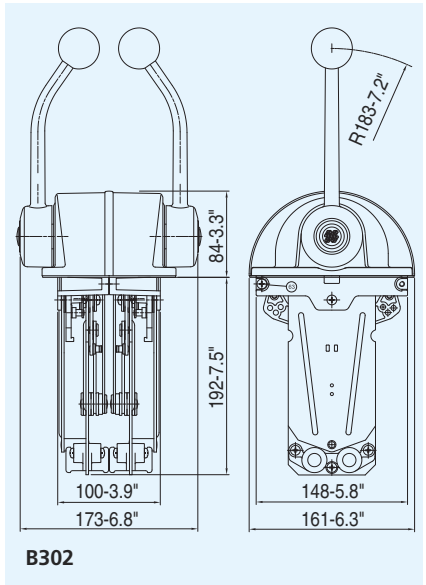

B302

SINGLE LEVER TOP MOUNT CONTROLS

Single lever / dual action control to operate both throttle and shift.
Suitable for any type of boats with outboard, inboard or I/O power plants.

FEATURES

- Enables easy and safe shifting by preventing accidental gear engagement unless engine is idling
- Made of chrome plated marine aluminum
- Pull-out handle disengages shift for warm-up
- Neutral safety switch **X43** - 38160 L (optional) prevents in-gear starting
- Exceeds EN ISO 11547 standards when X43 safety switch is installed
- For use with C2, C8 and MACHZero Ultraflex engine control cables.
- To connect C22 cable to B103 control only, use **K33** - 38378 D connection kit

MODELS

B103 - 37923 K
Single lever control for one engine

B104 - 37924 L
Twin lever control for two engines

X55 - 39421 V - Silver knob **optional**

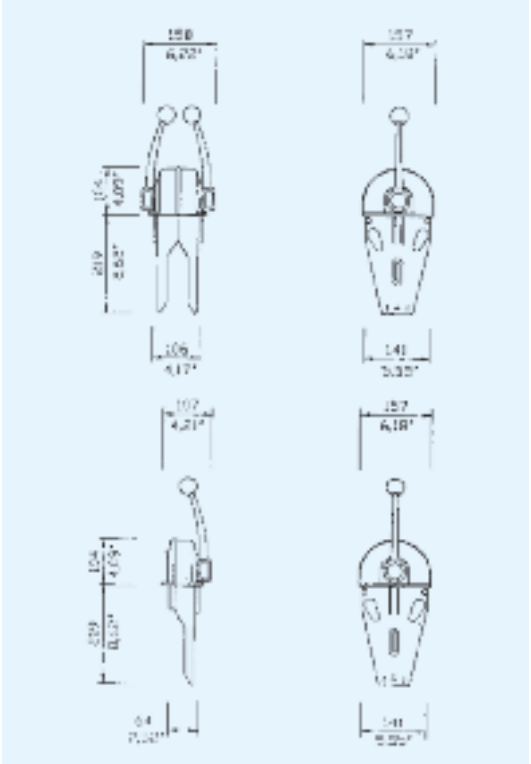

B103

B104

2 X55 (OPTIONAL)

B104 + 2 X55

SINGLE LEVER
TOP MOUNT CONTROLS

Single lever / dual action control to operate both throttle and shift.
Suitable for any type of boats with outboard, inboard or I/O power plants.

FEATURES

- Enables easy and safe shifting by preventing accidental gear engagement unless engine is idling
- Made of marine aluminum, chrome plated or powder coat finish
- Pull-out handle disengages shift for warm-up
- Neutral safety switch **X12** - 34543 Q (optional) prevents in-gear starting
- Exceeds EN ISO 11547 standards when X12 safety switch is installed
- Power trim switch conveniently located in the handle grip enables for easy tilting of the engine
- For use with all Ultraflex engine control cables except C22, C4 (discontinued), C36 and MACH36.
- Ultraflex C5, C16 and MACH5 cables require **K35** kit - 34730 U

MODELS

B65 - 34731 V
Single lever control for one engine, chrome plated.

B76 - 35312 E
Single lever control for one engine, chrome plated, with trim.

B66 - 34732 W
Twin lever control for two engines, chrome plated.

B78 - 35314 G
Twin lever control for two engines, chrome plated, with trim.

B73 -35007 U
Single lever control for one engine, black dome, chrome plated lever.

B77 - 35313 F
Single lever control for one engine, black dome, chrome plated lever, with trim.

B74 - 35008 B
Twin lever control for two engines, black dome, chrome plated lever.

B79 - 35315 H
Twin lever control for two engines, black dome, chrome plated lever, with trim.

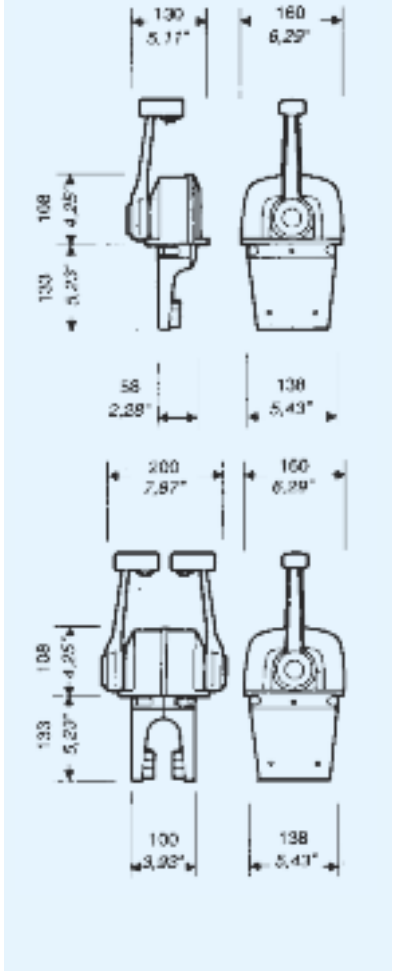

Handle with trim

SINGLE LEVER TOP MOUNT CONTROLS

Single lever / dual action control to operate both throttle and shift.
Suitable for any type of boats with outboard, inboard or I/O power plants.

FEATURES

- Enables easy and safe shifting by preventing accidental gear engagement unless engine is idling
- Made of marine aluminum, chrome plated or powder coat finish
- Pull-out handle disengages shift for warm-up
- Neutral safety switch **X12** - 34543 Q (optional) prevents in-gear starting
- Exceeds EN ISO 11547 standards when X12 safety switch is installed
- Provided with a positive lock-in neutral to prevent accidental gear engagement
- For use with all Ultraflex engine control cables except C22, C4 (discontinued) , C36 and MACH36.
  Ultraflex C5, C16 and MACH5 cables require **K35** kit - 34730 U

MODELS

B665 - 40656 G
Single lever control for one engine. Chrome plated.

B666 - 40657 J
Twin lever control for two engines. Chrome plated.

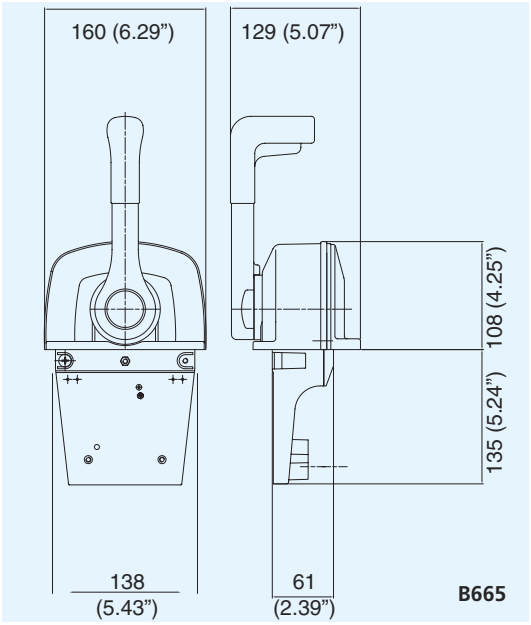

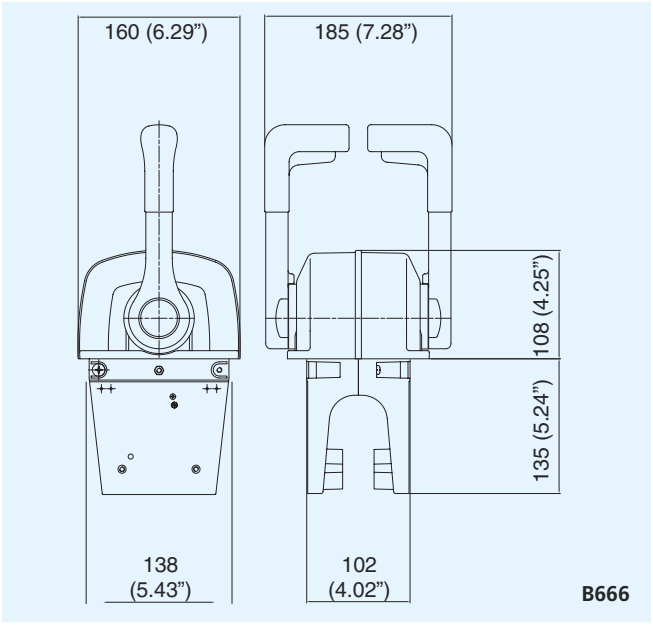

TWO LEVER TOP MOUNT CONTROLS

B46
B58 with interlock

B50
B59 with interlock

Two lever / single action control: each lever operates separately either the throttle or the shift.
Suitable for use with outboard, inboard or I/O power plants.

FEATURES

- Flush mount suitable for exposed positions such as flying bridge
- Made of marine aluminum with chrome plated lever
- Adjustable brake to avoid throttle creep and positive detent for shift. Both can be adjusted from the outside
- Neutral safety switch **X12** - 34543 Q (optional) prevents in-gear starting
- Available with straight or bent levers
- B58 and B59 models are provided with an interlock kit to prevent accidental gear engagement
- Exceeds EN ISO 11547 standards when X12 safety switch is installed
- For use with Ultraflex C2, C8 and MACHZero engine control cables.
- Ultraflex C22 cable requires **K22** - 34713 Q connection kit.

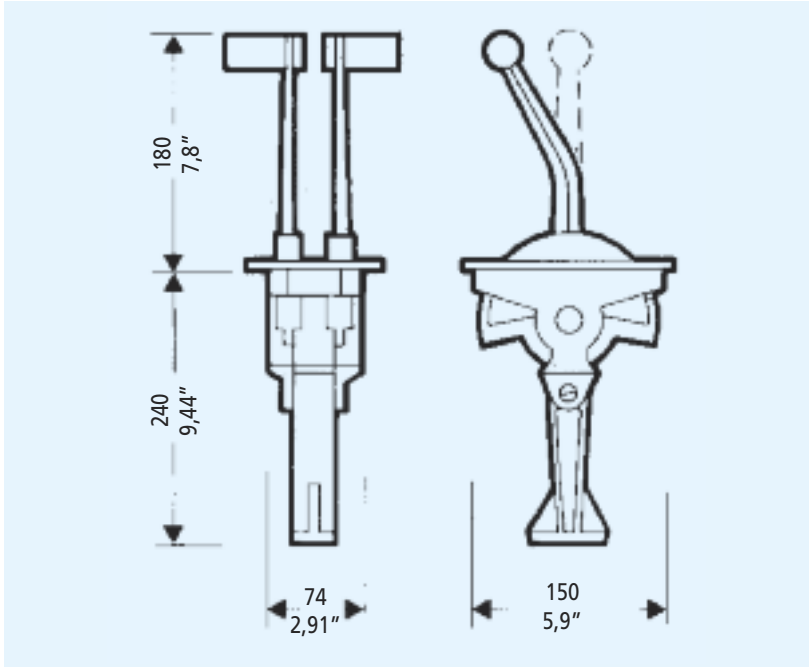

MODELS

BENT LEVERS:

B46	- 34461 P	Throttle and shift
B46T	- 34462 Q	Throttle only
B46S	- 34463 R	Shift only
B58R	- 34570 W	Throttle and shift. With interlock. Right hand installation
B58L	- 34716 T	Throttle and shift. With interlock. Left hand installation

STRAIGHT LEVERS:

B50	- 34464 S	Throttle and shift
B50T	- 34465 T	Throttle only
B50S	- 34466 U	Shift only
B59R	- 34571 X	Throttle and shift. With interlock. Right hand installation
B59L	- 34717 U	Throttle and shift. With interlock. Left hand installation

TWO LEVER TOP MOUNT CONTROLS HYBRID OR MECHANICAL VERSIONS

Two lever / single action control: each lever operates separately either the throttle or shift. Suitable for use with outboard, inboard or I/O power plants.

FEATURES

- Flush mount suitable for exposed positions such as flying bridge
- On **hybrid versions**, especially suitable for jet boats, throttle or shift, or throttle and shift control is provided by a 0-5V voltage signal. The sensor has an analog output signal which can be single or redundant. For the hybrid controls, please contact our Technical Service for custom configuration.
- Levers structure made of die cast zinc alloy provided with a soft thermoplastic ergonomical handgrip
- Adjustable brake to avoid throttle creep and positive detent for shift
- Provided with an interlock kit to prevent accidental gear engagement
- Adjustable ratchet for precise throttle operation obtained applying to the gas lever the optional kit **K52** - 37382 B
- Neutral safety switch **X12** - 34543 Q included prevents in-gear starting
- Raked throttle handle and straight gear handle for a better manoeuvring
- Supplied for right hand installation. Left hand installation available on request
- Exceeds EN ISO 11547 standards when X12 safety switch is installed
- For use with Ultraflex C2, C8, MACHZero and all 33C style engine control cables.
- Ultraflex C22 and all 43C style cables require **K22** - 34713 Q connection kit.

MODELS

Fully mechanical controls:

B204R - 37383 C - Throtte and shift - Black
B208R - 37654C - Throtte and shift – White

Hybrid controls:
Black finish:

B204R-ETC - 42832 L -	Throttle controlled by an electric signal, shift by a mechanical cable.
B204R-ESC - 42775 B -	Shift controlled by an electrical signal, throttle by a mechanical cable.
B204R-ETSC - 42776 D -	Throttle and shift controlled by an electrical signal

White finish:

B208R-ETC - 42835 T -	Throttle controlled by an electric signal, shift by a mechanical cable.
B208R-ESC - 42833 N -	Shift controlled by an electrical signal, throttle by a mechanical cable.
B208R-ETSC - 42834 R -	Throttle and shift controlled by an electrical signal

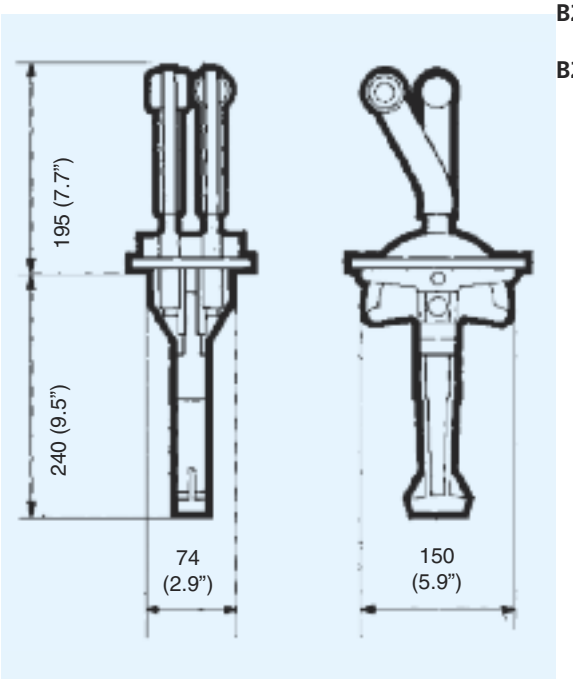

TWO LEVER TOP MOUNT CONTROLS

Two lever / single action control: each lever operates separately either the throttle or the shift.
Suitable for use with outboard, inboard or I/O power plants.

FEATURES

- Made of aluminium, chrome plated or black powder coat finish
- Throttle lever is provided with adjustable brake tension release system and shift lever with forward, reverse and neutral detents.
- Neutral safety switch **X12**-34543 Q (optional) prevents in-gear starting
- In dual station applications the **L23**-31649 B selector unit has to be used (page 110)
- Exceeds EN ISO 11547 standards when X12 safety switch is installed
- Use with all Ultraflex control cables except C4 (discontinued):
  - C14 and MACH14 cables require no kit
  - For C2, C8 and MACHZero cables the connection kit **K67** - 40705 T is included
  - C5, C16 and MACH5 cables require **K63** kit - 40757 N
  - C22 cable requires **K64** kit - 40758 R
  - C36 and MACH36 cables require **K65** kit - 40759 T

MODELS

CHROME PLATED:
B322 - 40669 S Throttle and shift
B322T - 40670 A Throttle only
B322S - 40673 G Shift only

BLACK FINISH:
B324 - 40674 J Throttle and shift
B324T - 40675 L Throttle only
B324S - 40676 N Shift only

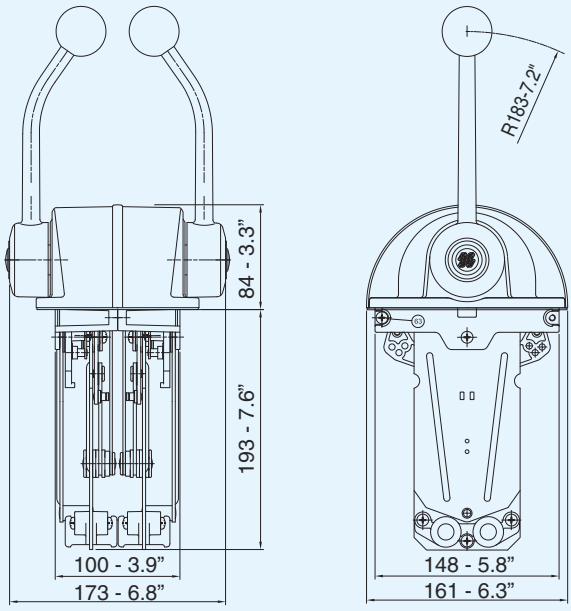

B322 - B324

TWO LEVER TOP MOUNT CONTROLS

Two lever / single action control: each lever operates separately either the throttle or the shift.
Suitable for use with outboard, inboard or I/O power plants.

FEATURES

- All the four versions are provided with the shift lever detents and with a brake tension release system adjustable from the outside of the throttle lever
- Neutral safety switch **X12** - 34543 Q (optional) prevents in-gear starting
- Exceeds EN ISO 11547 standards when X12 safety switch is installed
- Suitable for exposed positions such as flying bridge
- For use with Ultraflex C2, C8 and MACHZero engine control cables
- Ultraflex C22 cable requires **K32** - 34662 Z connection kit

MODELS

B99 - 36854 N
Throttle and shift. Black painted with chrome levers

B101 - 36856 P
Throttle and shift. White painted

B102 - 36899 G
Throttle and shift. Black painted

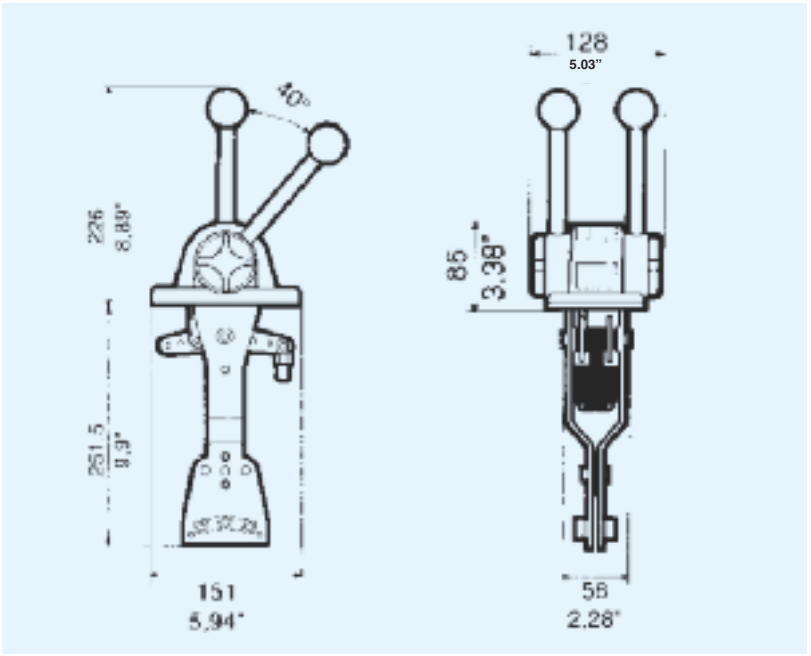

TWO LEVER SIDE MOUNT CONTROLS

B47 B49

Suitable for all outboard engines.

FEATURES

- Made of nylon fiberglass with anodized aluminum levers
- Left or right side mount installation
- For use with Ultraflex engine control cables:
  - C14 and MACH14 with **K23** - 32773 D connection kit
  - C2, C8, and MACHZero with **K25** - 32775 F connection kit
  - C5 and MACH5 without connection kit

MODELS

B47 - 32770 A - Light grey finish
B49 - 33283 S - Black finish

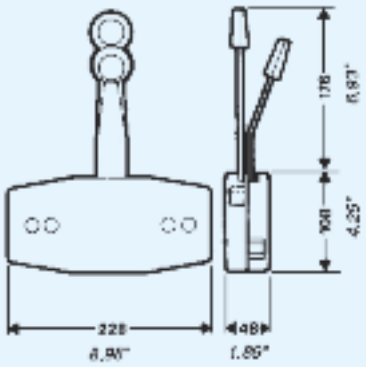

B47 - B49

B35 CONTROL BOX

FEATURES

- Lever and flange all stainless steel.
- Flush side mount installation.
- Particulary suitable for throttle control and hydraulic shift operation.
- Provided with adjustable brake tension release and detents.
- For use with Ultraflex C2, C8 and MACHZero engine control cables
  B35 - 32386 A

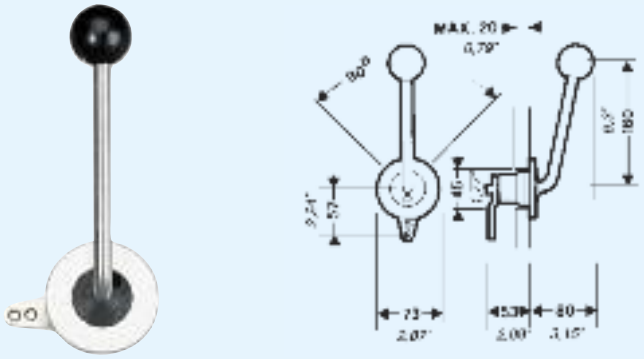

B35

ACCESSORIES FOR CONTROL BOXES

K22 - 34713 Q
Kit to connect C22 cable to top mount two lever control boxes, B46, B50, B58, B59, B204, B208, B322, B324

K23 - 32773 D
Kit to connect C14 and MACH14 cables to B47 and B49 control boxes.

K25 - 32775 F
Kit to connect C2, C8 and MACHZero cables to B47 and B49 control boxes.

K32 - 34662 Z
Kit to connect C22 cable to top mount two lever control boxes B99, B101 and B102.

K33 - 38378 D
Kit to connect C22 cable to B103 control box.

K35 - 34730 U
Kit to connect C5, C16 and MACH5 cables to single lever control boxes, except B301, B302, B103 and B104.

KB1 - 39964 L
Kit to connect C22 cable to B310, B183, B184 controls.

K83 - 42836 V
Kit to connect C48 cable to B310, B183, B184 controls

K51 - 32526 N
Kit to connect C14 and MACH14 cables to engine for use with B89 and B90 controls.

K59 - 40144 C
Kit to connect C2, C8 and MACHZero cables to B301 and B302 controls (supplied with the box).

K60 – 40145 E
Kit to connect C5, C16 and MACH5 cables to B301 and B302 control boxes.

K61 – 40146 G
Kit to connect C22 cable to B301 and B302 control boxes.

K62 – 40147 J
Kit to connect C36 and MACH36 cables to B301 and B302 control boxes.

K63 - 40757 N
Kit to connect C5, C16, MACH5 cables to B322 and B324 controls.

K64 - 40758 R
Kit to connect C22 cable to B322 and B324 controls.

K65 - 40759 T
Kit to connect C36 and MACH36 cables to B322 and B324 controls.

K67 - 40705 T
Kit to connect C2, C8 and MACHZero cables to B322 and B324 controls (supplied with the box)

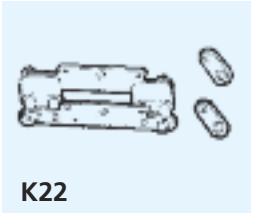
K22

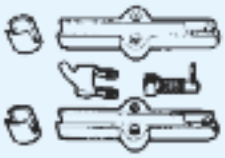
K23

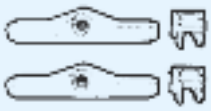
K25

K32

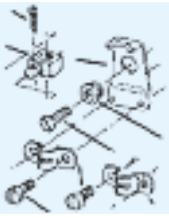
K33

K35

KB1

new

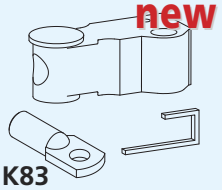
K83

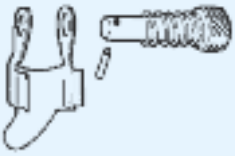
K51

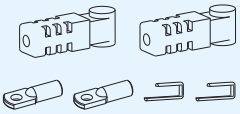
K59

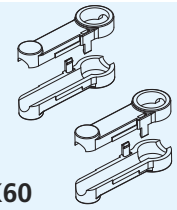
K60

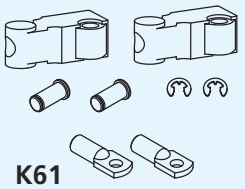
K61

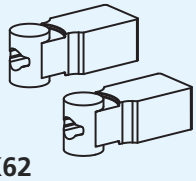
K62

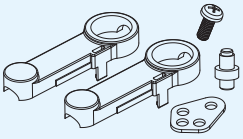
K63 PARTS SHOWN X 2

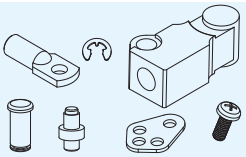
K64 PARTS SHOWN X 2

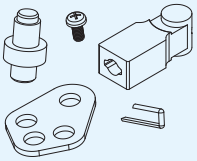
K65 PARTS SHOWN X 2

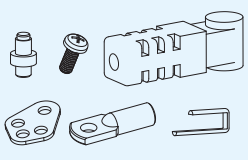
K67 PARTS SHOWN X 2

ACCESSORIES FOR CONTROL BOXES

X12 - 34543 Q
Neutral safety switch to prevent in-gear starting.

X41 - 38130 F
Neutral safety switch to prevent in-gear starting, suitable for B400 and hybrid controls. IP67 protecion.

X43 - 38160 L
Neutral safety switch to prevent in-gear starting, suitable for B103 and B104 controls.

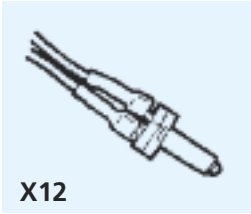
X12

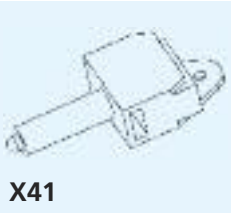
X41

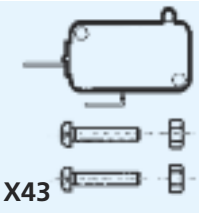
X43

CONTROL BOX - CONTROL CABLE APPLICATION MATRIX

SINGLE LEVER CONTROLS

MODEL	B400	B183 - B184 B85 B310CH - B310BR - B310B	B301 B302	B103	B104	B65 - B66 - B73 B74 - B76 - B77 - B78 B79 - B665 - B666	B89 B90
C2	X	X	K59*	X	X	X	X
C8	X	X	K59*	X	X	X	X
C14	-	X	X	-	-	X	X
C5	-	K35	K60	-	-	K35	K35
C36	-	-	K62	-	-	-	-
C16	-	K35	K60	-	-	K35	K35
C22	-	-	K61	K33	-	-	-
MACHZero	X	X	K59*	X	X	X	X
MACH5	-	K35	K60	-	-	K35	K35
MACH36	-	-	K62	-	-	-	-
MACH14	-	X	X	-	-	X	X

***: Supplied with the control**
X: No kit required
- : No connection

TWO LEVER CONTROLS

MODEL	B322 B324	B46 - B50 - B58 - B59 B204 - B208	B99 B101 - B102	B47 B49	B35
C2	K67*	X	X	K25	X
C8	K67*	X	X	K25	X
C14	X	-	-	K23	-
C5	K63	-	-	X	-
C36	K65	-	-	-	-
C16	K63	-	-	X	-
C22	K64	K22	K32	-	-
MACHZero	K67*	X	X	K25	X
MACH5	K63	-	-	X	-
MACH36	K65	-	-	-	-
MACH14	X	-	-	K23	-

***: Supplied with the control**
X: No kit required
- : No connection

ENGINE CONTROL CABLES

HOW TO MEASURE FOR CONTROL CABLE INSTALLATION

FOR NEW INSTALLATION, measure A + B distance from the control along an unobstructed cable routing to clutch and / or throttle connection.
Round this dimension off to the next whole foot: you will have your cable length.
We recommend that the cable bends have a minimum radius of about 8" (200 mm).
For outboard engine installations, it is necessary to add three feet to the obtained length, in order to allow the engine movement.
To determine the needed length of the REPLACEMENT CABLE, measure it from tip to tip.
When ordering, specify the cable length in feet, rounding the dimension off to the next whole value.
If any kit is required to complete the cable connection, consult the appropriate section in this catalogue. (Page 149)

SELECTION OF ENGINE CONTROL CABLES

ENGINE		ULTRAFLEX ENGINE CONTROL CABLES
OUTBOARD	Mercury® and Gen. II™ Controls	C36 - MACH36
	Mercury® Mariner® over 50 hp (37kW)	C5 - MACH5
	Mariner® up to 50 hp (37kW)	C16
	Force® Selva® Yamaha® Suzuki® Tohatsu® Honda® Nissan®	C2 - C8 - MACHZero
	Johnson® - Evinrude® - BRP®	after 1979 C14-MACH14
JET	Weber®	C40 - C41
STERNDRIVE	Mercruiser® and Gen. II™ Controls	C36 - MACH36
	Mercruiser®	C5 - MACH5
	OMC® - BRP®	after 1979 C14-MACH14
	Volvo Penta® Yanmar® Volkswagen®	C2 - C8 MACHZero - C22
INBOARD		C2 - C8 - MACHZero - C22

OUTBOARD

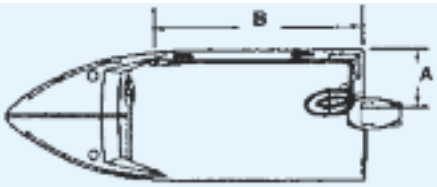

A + B + 3' (90 cm) = L

INBOARD/STERNDRIVE

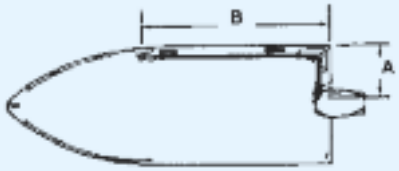

A + B = L

MACH™ SERIES HIGH EFFICIENCY AND FLEXIBILTY ENGINE CONTROL CABLES

For the ultimate in efficiency and response, the Mach Series cables deliver unmatched results. They have been specifically designed to make even the most complex of cable installations result in smooth, easy and precise shift and throttle movement.

HIGH PERFOMANCE

- The PATENTED "high performance" MACH™ Cables are the result of our decades of experience in producing high quality, long lasting, flexible cables. The innovative core design maximizes efficiency and minimizes lost motion, while the exclusive design of the conduit provides extremely high level of flexibility.

FEATURES AND PERFORMANCE

- Available in the following configurations:
  - **MACHZero** - Universal style (like C2, C8)
  - **MACH5** - Mercury® style (like C5)
  - **MACH14** - Current OMC® - BRP® style (like C14)
  - **MACH36** - Gen II Mercury® style (like C36)
- Suitable for outboard – inboard and sterndrive engines
- High efficiency for smooth operation
- High flexibility for reduced bend radius. Ideal for long complex cable routings
- Maintenance free
- Stainless steel cables end fittings
- High resistance blue outer jacket against abrasion, UV and chemicals

CONTROL CABLES FOR JET ENGINES

C40 Stroke: 86 mm (3.4")
Throttle Cable for Weber® jet engines

C48 Stroke: 84 mm (3.3")
Shift and throttle cable for jet boats 40 Class. Suitable for Teleflex® controls. With **K83** - 42836V connection kit is suitable for use with Ultraflex B310, B183, B184 controls.

C40

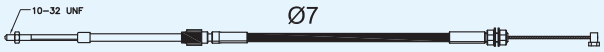

C48

ENGINE CONTROL CABLES

C2 Stroke: 87 mm (3.4”)
For use with inboard, sterndrive and outboard engines with appropriate accessories.

C8 Stroke: 87 mm (3.4”)
For use with inboard, sterndrive and outboard engines, with appropriate accessories.

MACHZero 87 mm (3.4”)
For use with inboard, sterndrive and outboard engines.
Ideal for high performance applications, long cable runs and complex routings.
Blue color jacket.

C14 Stroke: 75 mm (3”)
For BRP® - Evinrude® (OMC®) engines manufactured from 1979 to date.

MACH14 Stroke: 75 mm (3”).
For BRP® - Evinrude® (OMC®) engines manufactured from 1979 to date.
Blue color jacket
High performance applications

C36 Stroke: 87 mm (3.4”)
For Mercury® and Mercruiser® engines and Mercury® Generation II™ series controls.

MACH36 Stroke: 87 mm (3.4”).
For Mercury® and Mercruiser® engines and Mercury® Generation II™ series controls.
Blue color jacket
High performance applications

C5 Stroke: 95 mm (3.75”)
For Mercury® and Mercruiser® engines.

MACH5 Stroke: 95 mm (3.75”).
For Mercury® and Mercruiser® engines.
Blue color jacket
High performance applications

C16 Stroke: 80 mm (3.1”). For Mariner® engines up to 40 hp.

C22 Stroke: 80 mm (3.1”)
Stainless steel clamp fittings.
Recommended for heavy duty applications.

B14 Stroke: 70 mm (2.8”)
Designed for throttle, fuel shut-off and other applications. Supplied with L13 and L14 clamp and shim.

C40 Stroke: 86 mm (3.4”)
Throttle Cable for Weber® jet engines

C48 Stroke: 84 mm (3.3”)
Shift and throttle cable for jet boats 40 Class

C2

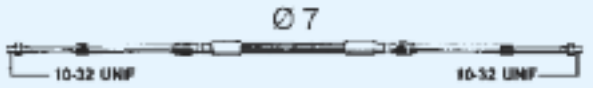

C8

MACHZero

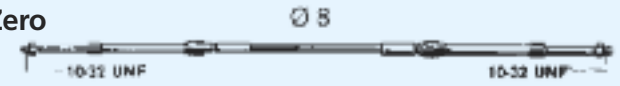

BRP® - EVINRUDE® (OMC®) CABLES

C14

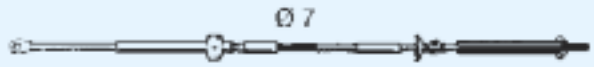

MACH14

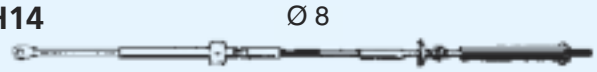

MERCURY® - MERCRUISER® - MARINER® CABLES

C36

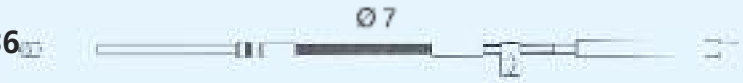

MACH36

C5

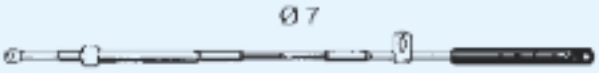

MACH5

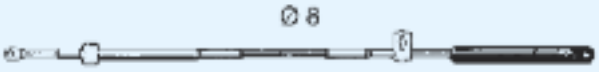

C16

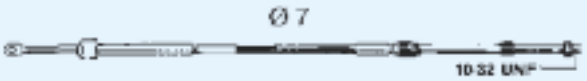

C22

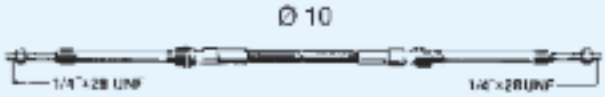

B14

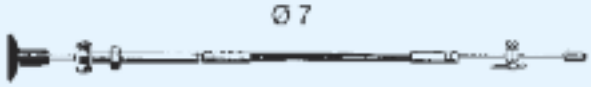

C40

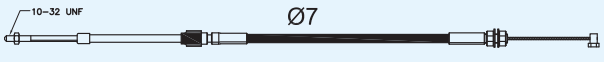

C48

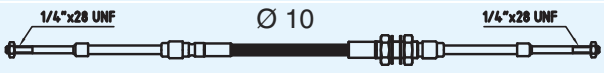

ACCESSORIES FOR ENGINE CONTROL CABLES

K68 - 40895 B
Recessed bulkhead support for B14 cable.

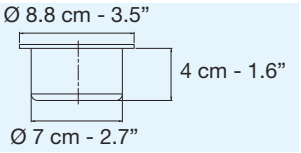

L2 - 30324 D
Cable clamp block

L3 - 30325 E
Shim and clamp block.
Fits C2, C8 and MACHCZero cables.

L7 - 38078 U
Ball joint 10-32 UNF.
Stainless steel, fits C2, C8 and MACHCZero cables.

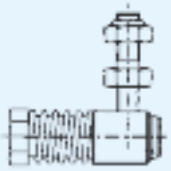

L12 - 30334 F
Cable end fitting.
Fits C2, C8 and MACHCZero cables.

L13 - 30335 G
Stop collar. Fits B14 cables.

L14 - 30336 H
Cable clamp block.
Fits C2, C8 and MACHCZero cables.

L25 - 31906 D
Clevis 10-32 UNF.
Fits C2, C8 and MACHCZero cables.

L26 - 33517 N
Clevis 1/4” x 28 threaded. Fits C22 cable.

K56 - 39237 C
Adapts C2, C8 and MACHCZero cables for use with Mercury engines.

K57 - 39238 E
Adapts C2, C8 and MACHCZero cables for use with BRP® - Evinrude engines.

MONOFILAMENT POLYESTER BRAIDED SLEEVINGS FOR CABLES

Available in UFLEX

STANDARDS

- Compliant with RoHS 2002/95/CE specifications
- NF EN 60684-1 (10-2003)
- NF EN 60684-2 (01-1998) modified by
  NF EN 60684-2/A1 (12-2003)
  NF EN 60684-2/A2 (05/2006)
- NF EN 60684-3 sheets 340 to 342 (4-2003)

NOMINAL INTERNAL DIAMETER	PART No 1 m legth	BULK PART No ROLLS	ROLL LENGTH metres	ROLL WEIGHT Kg
10 mm (0.39”)	68146 N	68180 N	100 m	8,0
15 mm (0.59”)	68147 R	68181 R	50 m	6,3
20 mm (0.78”)	68148 T	68182 T	50 m	8,9
25 mm (0.98”)	68149 V	68183 V	50 m	10,1
30 mm (1.18”)	68150 D	68184 X	50 m	13,5

SELECTOR UNIT FOR DUAL STATION APPLICATIONS

Selector unit for use with single lever controls in dual station applications. It enables indipendent control over throttle and shift from either the main station or the flying bridge station.

NOTE: before changing station, throttle must be on idling position and shift in neutral.

L23 - 31649 B

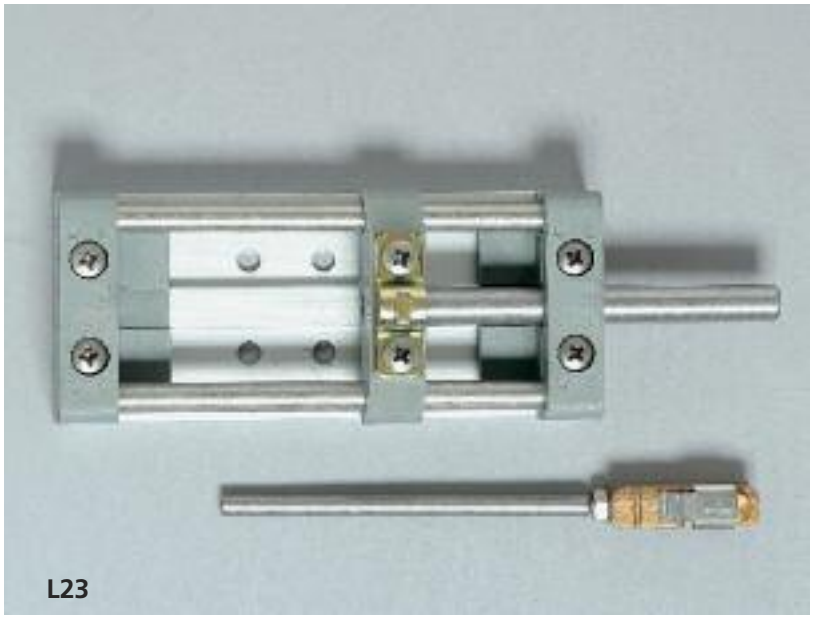
L23

YAMAHA ENGINE KITS*

K7 - 30320 V for 15 hp engines
K8 - 30321 A for 25 hp engines
K9B - 33205 A for 5 hp engines
K14B - 32584 E for 10/15 hp engines
K14F - 38098 C for 10/15 hp engines
K36 - 35034 B for 8 hp engines
S-2674 - 32654 X Yamaha Throttle Connector
S-2675 - 32655 Y Yamaha Shift Connector

** Minimun order quantity:*
10 pieces for part number

K7

K8

K14B

K9B

K14F

K36

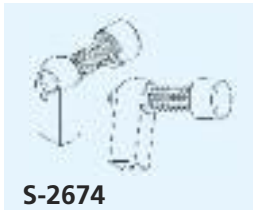
S-2674

S-2675

ULTRAFLEX S.p.A.

AVAILABLE SPARE PARTS

WARNING

In order to mantain the correct functionality of the product, the replacement with spare parts has to be made by qualified technicians **only**.

T67

Black bezel	59336 W
White bezel	59601 U
Zinc-chrome steel bushing	56402 K
Installation kit	38070 K
Shaft kit	70550 J

M58

Lock nut engine side	55170 M

T85

Black bezel	59336 W
White bezel	59601 U
Shaft kit	70550 J
Spent travel nylon tube	59869 F
Plastic ferrule for nylon tube	59857 Z
Cable lock-in screw	59926 R
Installation kit	41165 S

T71FC - T72FC - T73NRFC - T74NRFC

90° Black bezel	58051 L
90° White bezel	71942 H
Shaft kit	70549 A
Cable lock-in screw	70022 G
Spent travel nylon tube	59869 F
Plastic ferrule for nylon tube	59857 Z

X52 Tilt Mechanism

Upper cover	72297 K
Lower cover	70140 N
Gasket	70138 C

T86 - T88

2 Shaft kits	71109 A

Steering Wheels

Stainless steel silver screws	60697 Q
Stainless steel black screws	60698 T
Black cap for V32	58078 Y
White cap for V32	58079 Z
Grey cap for V32	70155 C
Black cap for V33	59763 O
White cap for V33	59764 P
Grey cap for V33	59765 Q
Black cap for V45	59061 O
White cap for V45	59002 D
Grey cap for V45	71108 Y
Black cap for V38	59061 O
White cap for V38	59002 D
Black cap for Antigua	70161 X
White cap for Antigua	70162 Z
Grey cap for Antigua	70163 B
Wood cap for V23 and V35	56384 G

B301CR - B302CR - B301B - B302B - B322 - B324

Lever assembly with black knob	40897 F
Lever assembly with red knob B322 - B324	40898 H
Black knob	72054 G
Red knob	72020 N
Chrome rear cover B301CR	71461 R
Black painted rear cover B301B	71501 A
Gasket for B301CR - B301B	71366 X
Gasket for B302CR - B302B - B322 - B324	71516 P
Installation kit B301	40170 D
Installation kit B302	40192 P
Installation kit B322 - B324	40703 N

B103 - B104

Lever with handle	60909 N
Black knob	34830001
X55 Silver knob B103/B104	39421 V
Gasket for B103	61425 E
Gasket for B104	61426 G
Rear cover for B103	61738 C
Installation kit B103	60979 B
Installation kit B104	60804 D

B65 - B665 - B66 - B666
B73 - B74 - B76 - B77 - B78 - B79

Lever assembly B66 – B65 – B73 – B74	57076 R
Lever assembly B665	40915 E
Lever assembly B666	40916 G
Lever assembly with trim B76-B77-B78-B79	57459 E
Chrome rear cover	55529 Z
Black rear cover	55608 X
Installation kit B65 - B665	35147 J
Installation kit B66 - B666	30078 K
Installation kit B73	30049 F
Installation kit B74	35366 S
Installation kit B76	36134 F
Installation kit B77	30016 Q
Installation kit B78	36135 G
Installation kit B79	30017 R

B310CH - B310BR - B310B

Lever assembly B310CH	73158 A
Lever assembly B310BR	72119 J
Lever assembly B310B	73177 E
Screw cover flange B310CH - B310BR - B310B	72110 P
Chrome plated external flange B310CH - B310BR - B310B	72108 D
Black internal flange B310CH - B310BR - B310B	72109 F
Installation kit B310CH - B310BR - B310B	72222 B

B183 - B184 - B85

Lever assembly B183	70013 F
Lever assembly B184	70020 C
Cover for B183 – B184 – B85	56012 A
Flange for B183 – B184 – B85	56011 V
Installation kit B103	38947 F
Installation kit B184	38979 V
Installation kit B85	36008 C

B89 - B90

Black lever with lock	58245 T
White lever with lock	57899 L
Installation kit B89 - B90	36168 R

B46 - B50 - B58 - B59

Cover 57960 T	
Black knob	32394 A
Red knob	32472 Q
Installation kit	35365 R

B99 - B101 - B102

Red knob B99 – B101 – B102	58266 Y
Black knob B99 – B101 – B102	53185 V
Installation kit B99 – B101 – B102	35391 A

B14 Engine Stop Cable

B14 Kit	59976 G

WARNING

In order to mantain the correct functionality of the product, the replacement with spare parts has to be made by qualified technicians **only**.

HELM PUMPS	
Vented filler plug kit with valve	40801 N
Non vented filler plug kit	40800 L
Shaft seal kit	40875 V
Installation kit for UP20 F	40284 R
Installation kit for UP20 T	42864 A
Installation kit for: UP25 F/25NV F/28 F/33 F/33NV F/39 F/45 F and UP28-SVS	42862 W
Installation kit for UP25 T/28 T/33 T/39 T/45T	42864 A
Installation kit for UP28 R/33 R/39 R/45 R	42863 Y
Nylon round flange for X57	70666 E
Nylon square flange for X64	70670 V
Chrome plated cover ring - X68	40894 Z
Pump filling kit	40876 X
UC81-OBF OUTBOARD CYLINDER	
Black bull horn mounting bracket	42851 R
Through tube stainless steel rod	42852 T
Spacer kit	42853 V
Tiller arm connecting	42854 X
UC94-OBF OUTBOARD CYLINDER	
Black bull horn mounting bracket	42837 X
Through tube stainless steel rod	40174 M
Spacer kit	40878 B
Tiller arm connecting	42838 Z
UC128-OBF OUTBOARD CYLINDER	
Black bull horn mounting bracket	39490 R
Through tube stainless steel rod	39491 T
Spacer kit	41812 Z
Plastic cap kit	41810 V
UC128 Hardware kit	39979 A
Tiller arm connecting kit (ultrabolt)	40822 X
UC128-SVS OUTBOARD CYLINDER	
Tiller arm connecting kit (ultrabolt)	42081 R
UC68-OBS OUTBOARD CYLINDER	
Stainless steel tilt tube extension	39495 B
UC132-OBS OUTBOARD CYLINDER	
Stainless steel tilt tube extension	39495 B
Extension rod connecting pin	40917 J
INBOARD CYLINDERS	
Balljoint for UC69-I	40883 U
Balljoint for UC116-I	39477 Z
Balljoint for UC168-I and UC215-I	39478 B
Balljoint for UC293-I	40178 W
Balljoint for UC378-I	41310 Y
Balljoint and shim for UC69-I	40884 W
Balljoint and shim for UC116-I	39479 D
Balljoint and shim for UC168-I e UC215-I	39480 M
Balljoint and shim for UC293-I	40180 G
Balljoint and shim for UC378-I	41311 A
STERNDRIVE CYLINDERS	
Extension rod connecting pin	40917 J
NUT AND SLEEVE	
Brass nut and sleeve	71004 K
Nickel plated brass nut and sleeve	71013 L

ULTRAFLEX WHEEL DISPLAY

67436 T - Fashionable dismountable display in light gray painted metal.

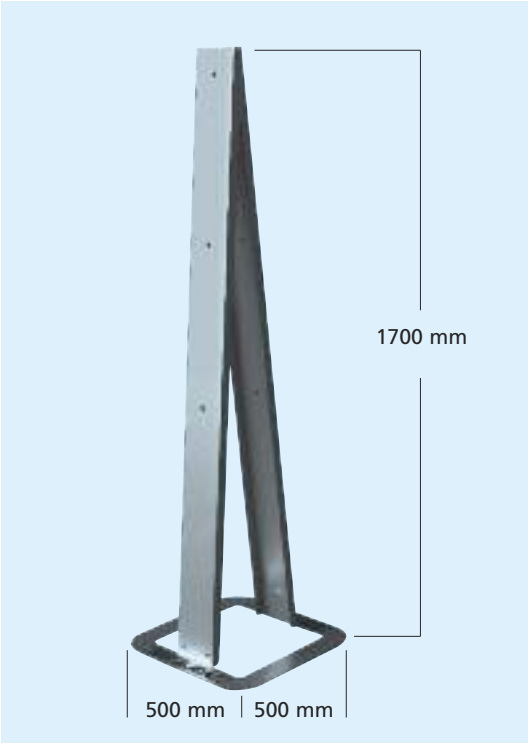

UFLEX and ULTRAFLEX ADHESIVE LABELS:

Printed on transparent vinyl

UFLEX - 65360 Z
Dimensions: 450 x 130 mm (17.71" x 5.12")

ULTRAFLEX - 65359 R
Dimensions: 300 x 130 (11.81" x 5.12")

ULTRAFLEX® AND UFLEX® MARKETING ITEMS

FOREX:

65369 U - Dimensions: cm 70 x 100 (2.29' x 3.28')

65370 C - Dimensions: cm 119 x 168 (3.9' x 5.5')

Please contact our Marketing Department to ask for the CD with all FOREX available.

FOREX WITH DIGITAL PHOTO AND VIDEO FRAME

Display digital photos and videos without PC or laptop.
Insert memory card (included) into photo frame to view Ultraflex or Uflex products or videos.
Remote control, USB connection cable and AC Adapter are included.
Power Supply: 110 - 220V ≈ 50/60Hz
CE and RoHS certified

68178 C - ULTRAFLEX® Forex with digital photo frame and memory card presenting Ultraflex products and videos.
Dimensions: cm 32 x 49 (1.04' x 1.60')

68177 A - UFLEX® Forex with digital photo frame and memory card presenting Ulex products and videos.
Dimensions: cm 32 x 49 (1.04' x 1.60')

Cover picture: Photo courtesy of Everglades Boats.

ULTRAFLEX S.p.a.

Via Milite Ignoto 8A
16012 Busalla (GE) - Italy
T +39 010 9620310/266 F +39 010 9620333
ut@ultraflexgroup.it
www.ultraflexgroup.it

ULTRAFLEX GROUP